CITY OF PACIFIC GROVE
Monterey County, California

DEPARTMENT OF PUBLIC WORKS

STANDARD DETAILS FOR STREET IMPROVEMENTS

NOVEMBER 2010

CITY OF PACIFIC GROVE

STANDARD DETAILS
FOR STREET IMPROVEMENTS

TABLE OF CONTENTS

Standard Detail No.	Title Description
100	Curb and Gutter
100A	Rolled Curb and Gutter Section
101	Standard Driveway
102	Roll Curb Driveway
103	Up Hill Driveway
104	Down Hill Driveway
105	"J" Type Driveway Approach
106	Sidewalk
106A	Alternate Sidewalk (Concrete Pavers)
107	Sidewalk Underdrain
108	Curb Ramp
109	Open Cross Gutter
110	Removal of Concrete Curb and Sidewalk
111	Replacement of Concrete Sidewalk
112	Typical Street Sections
113	Crowns
114	Cul-De-Sac
115	Street Sign Locations
116	General Sign Installation
117	Catch Basin
118	Monument
120	Parking Layouts
122	Street Tree Planting
200	Standard Manhole
201A	Concrete Internal Drop Manhole
201B	Concrete External Drop Manhole
202	Manhole Frame and Cover
203	Clean - Out
204	Wye and Laterals
205	Pipe Subgrade for Sewer and Storm Drain
206	Concrete Support for Undercut Pipe
207	Trench Section and Pavement Replacement
208	Sanitary Sewer Spot Repair

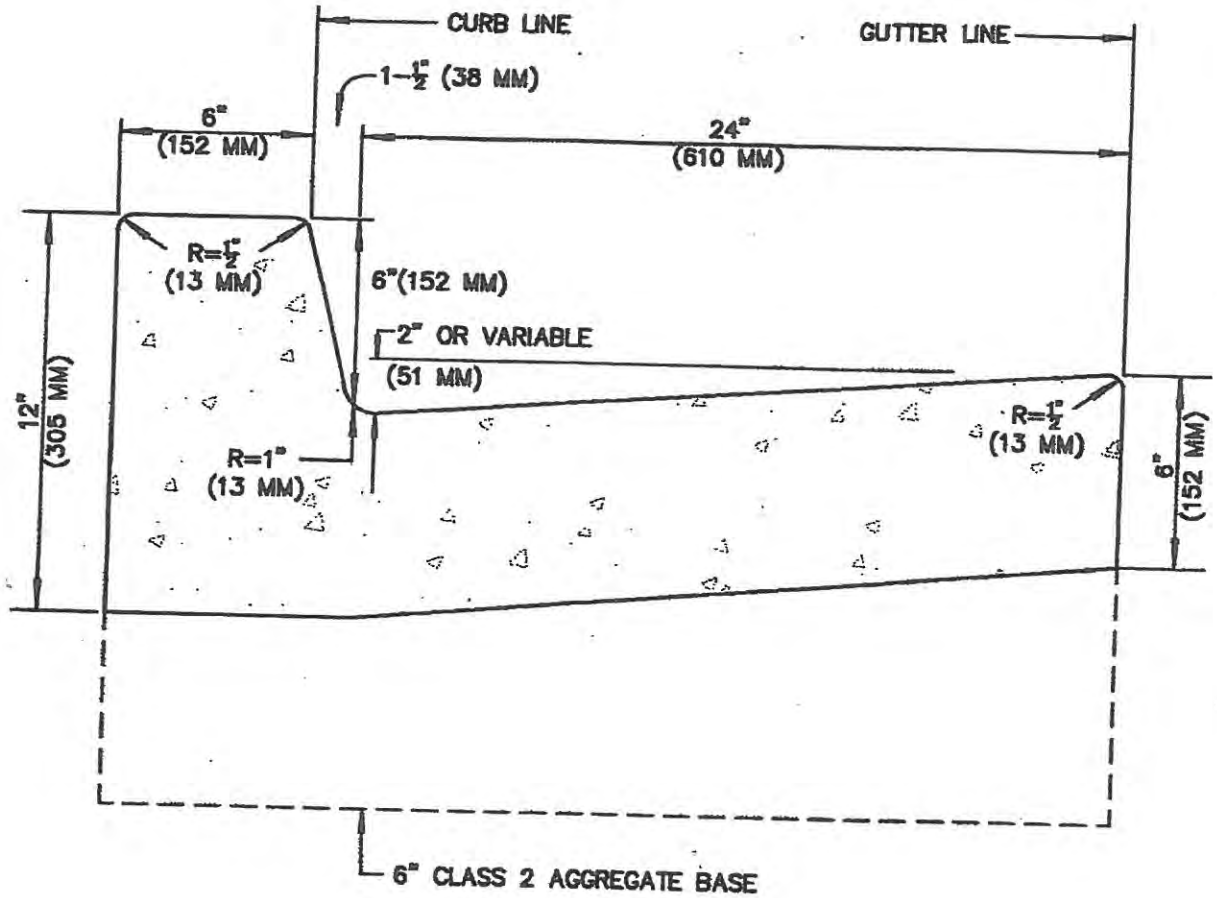

NOTES:

1. ALL WORKS SHALL BE DONE IN ACCORDANCE WITH SECTION 73 OF STATE OF CALIFORNIA DEPARTMENT OF TRANSPORTATION STANDARD SPECIFICATIONS
2. TOP AND FRONT OF CURBS AND GUTTERS TO BE FINE BRUSH FINISH AFTER TROWELLING; BRUSHING TO BE PARALLEL TO THE LINE OF THE CURB.
3. CONCRETE TO BE CLASS B (5 SACK).
4. PLACE 6" MIN CLASS 2 AGGREGATE BASE.

CITY OF PACIFIC GROVE		
STANDARD DETAILS FOR STREET IMPROVEMENTS		
DESIGNED BY	TITLE CURB & GUTTER	
DRAWN BY AP	APPROVED DATE	DETAIL No.
CHECKED BY	CITY ENGINEER RCE NO. 29411	100

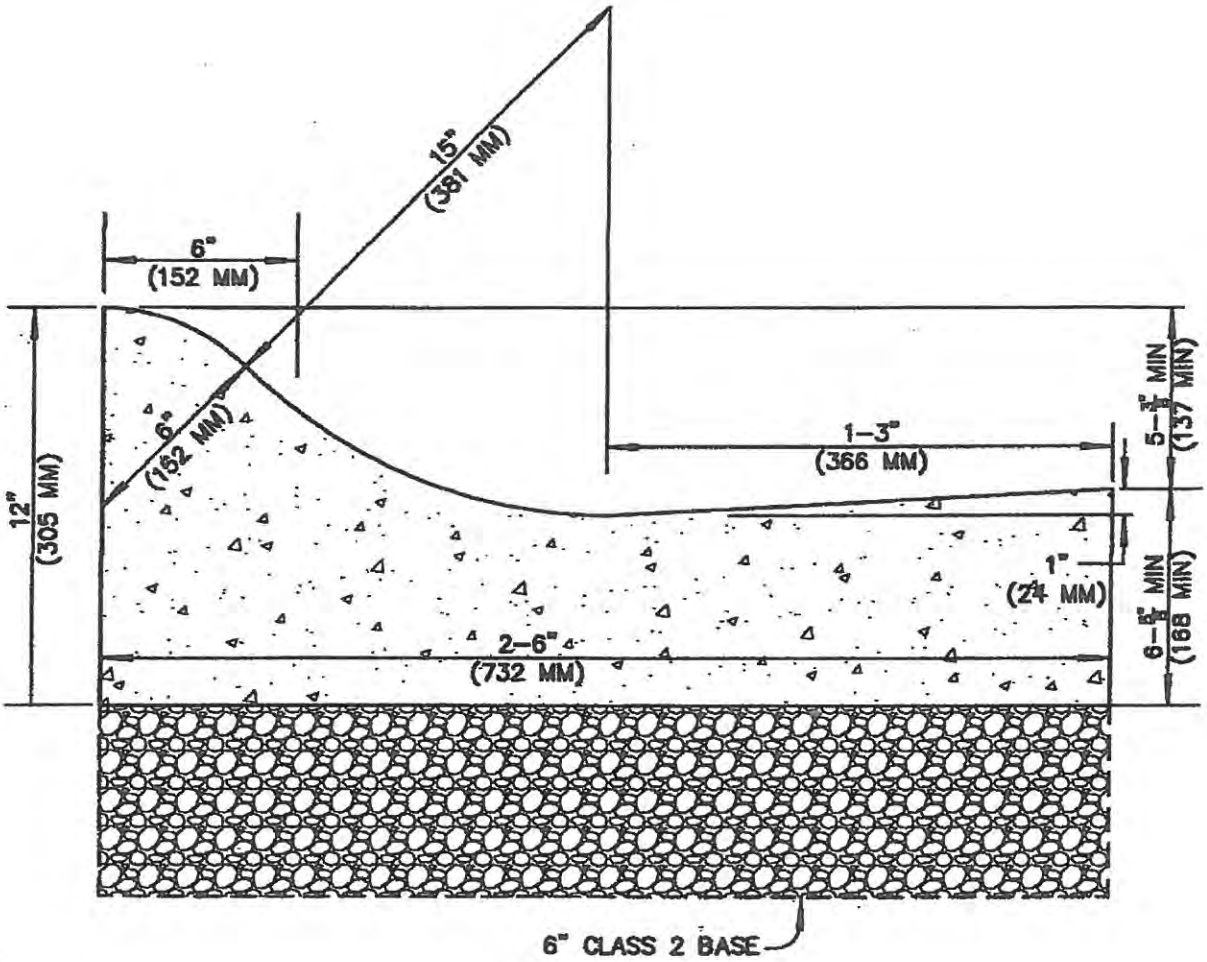

NOTES:

1. ALL WORKS SHALL BE DONE IN ACCORDANCE WITH SECTION 73 OF STATE OF CALIFORNIA DEPARTMENT OF TRANSPORTATION STANDARD SPECIFICATIONS
2. EXPANSION JOINTS TO BE DOWELED WITH TWO #4 (1/2") REBARS AT RETURN.
3. TOP AND FRONT OF CURB AND GUTTER TO HAVE FINE BRUSH FINISH.

CITY OF PACIFIC GROVE		
STANDARD DETAILS FOR STREET IMPROVEMENTS		
DESIGNED BY	TITLE ROLLED CURB & GUTTER SECTION	
DRAWN BY AP	APPROVED DATE	DETAIL No.
CHECKED BY	CITY ENGINEER RCE NO. 29411	100A

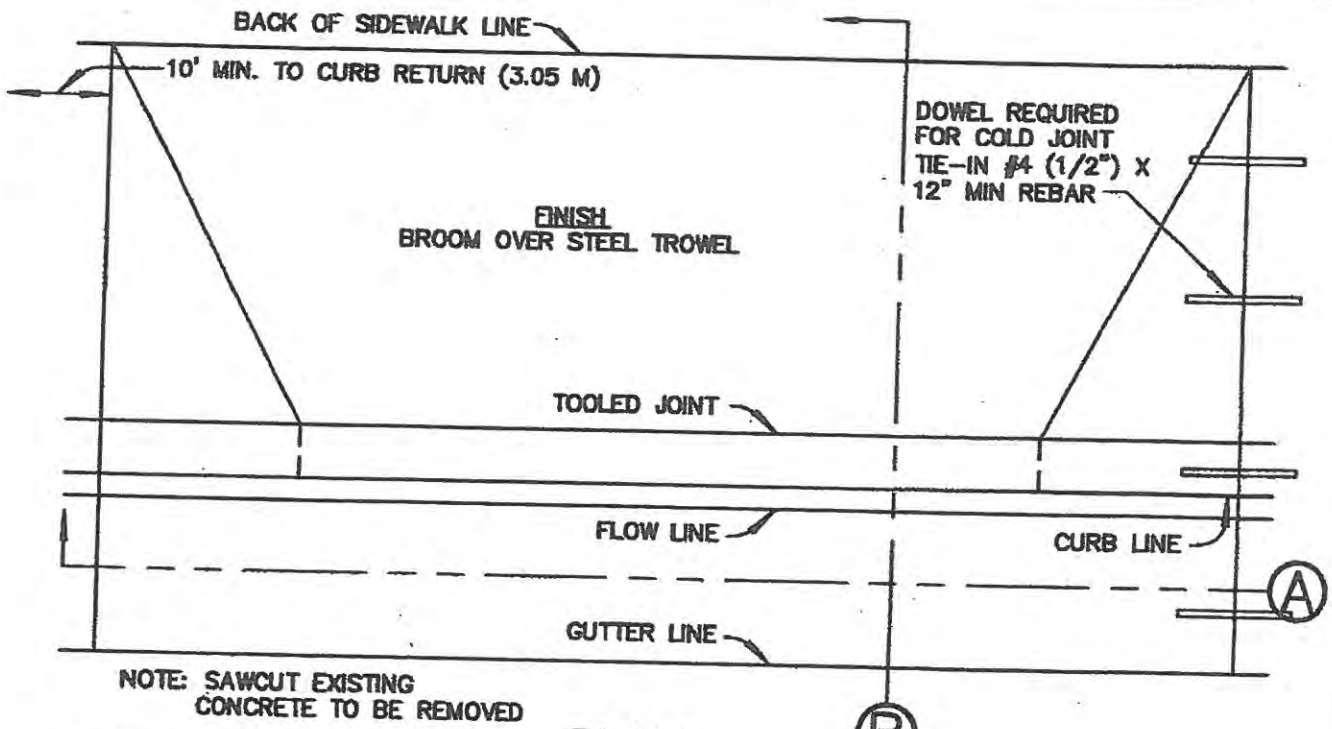

PLAN

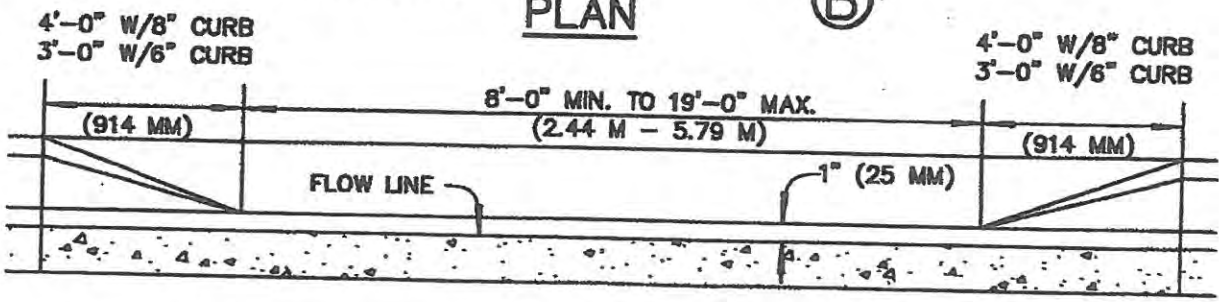

SECTION A

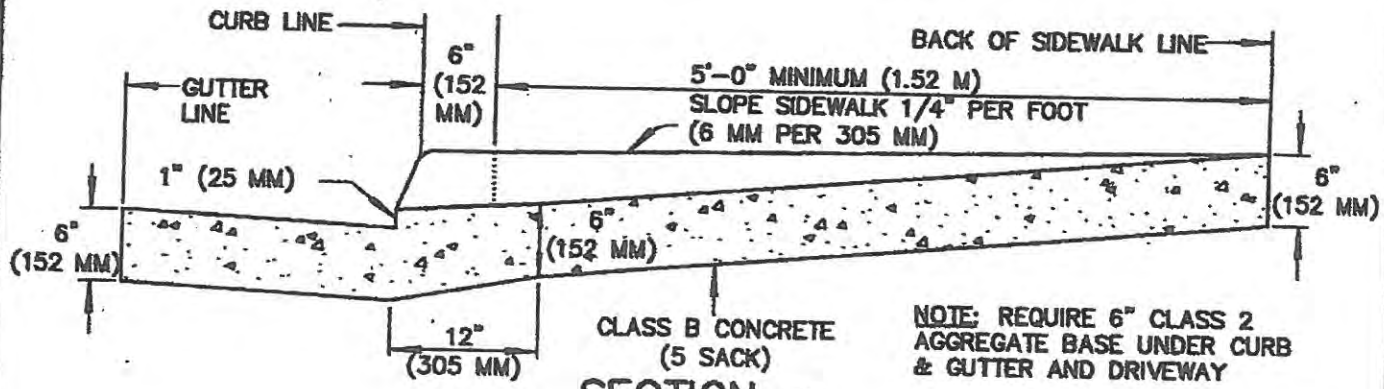

SECTION B

CITY OF PACIFIC GROVE			
STANDARD DETAILS FOR STREET IMPROVEMENTS			
DESIGNED BY	TITLE STANDARD DRIVEWAY		
DRAWN BY AP	APPROVED	DATE	DETAIL No.
CHECKED BY	CITY ENGINEER	RCE NO. 29411	101

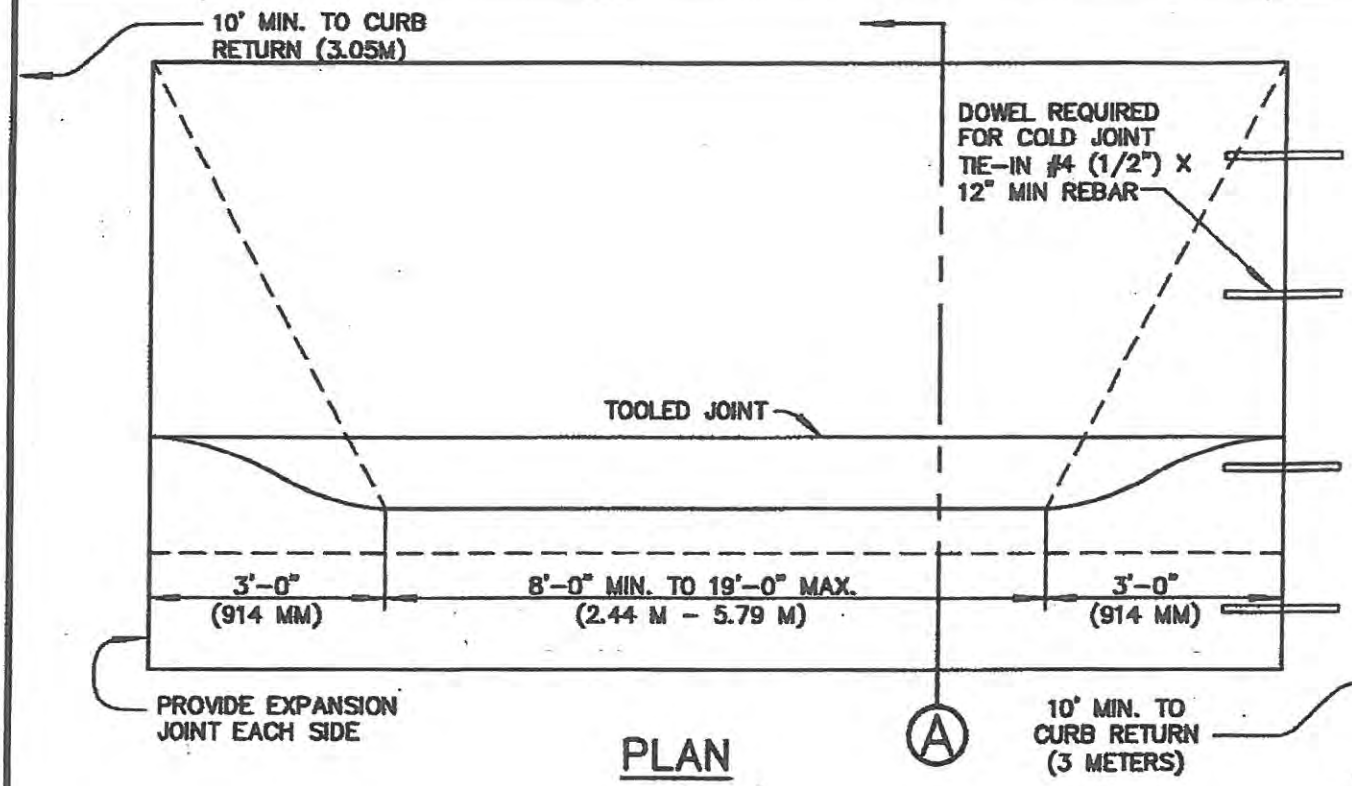

PLAN

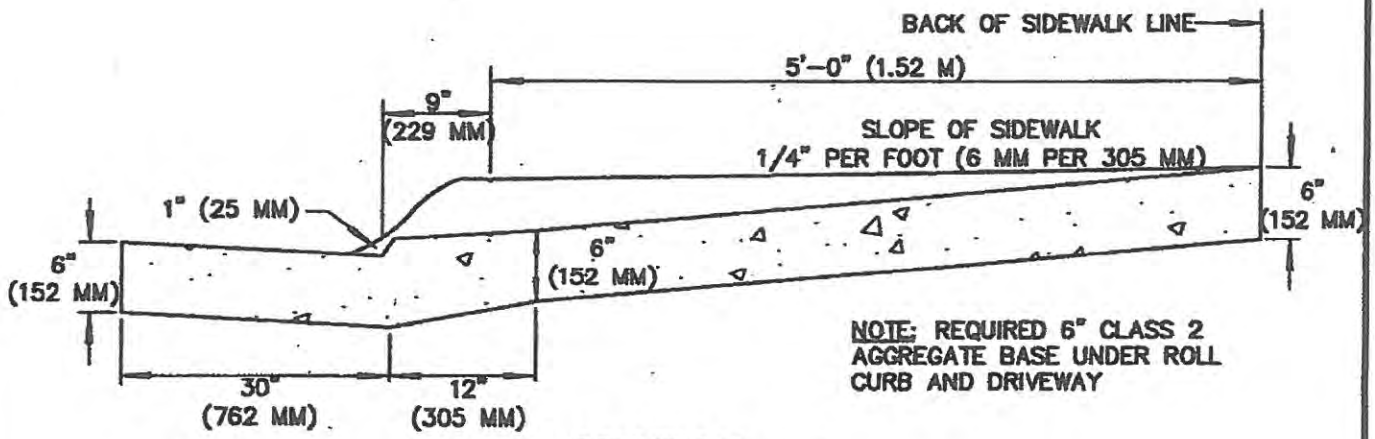

NOTE: REQUIRED 6" CLASS 2 AGGREGATE BASE UNDER ROLL CURB AND DRIVEWAY

SECTION A

NOTES:

1. SAWCUT EXISTING CONCRETE TO BE REMOVED FOR DRIVEWAY.
2. FINISH SHALL BE BROOM OVER STEEL TROWEL.
3. CLASS "B" (5 SACK) CONCRETE TO BE USED.
4. THIS DETAIL TO BE USED ONL AT EXISTING ROLL CURB.

CITY OF PACIFIC GROVE

STANDARD DETAILS FOR STREET IMPROVEMENTS

DESIGNED BY	TITLE ROLL CURB DRIVEWAY		
DRAWN BY AP	APPROVED	DATE	DETAIL No.
CHECKED BY	CITY ENGINEER	RCE NO. 29411	102

NOTES:

1. ALL ELEVATIONS ARE AT LOW SIDE OF DRIVEWAY.
2. MAXIMUM ALLOWABLE GRADE IS 25%, RECOMMENDED GRADE IS 15%
3. MAXIMUM GRADE BREAK IS 15%
4. MAXIMUM RAMP BREAKOVER ANGLE IS 14%

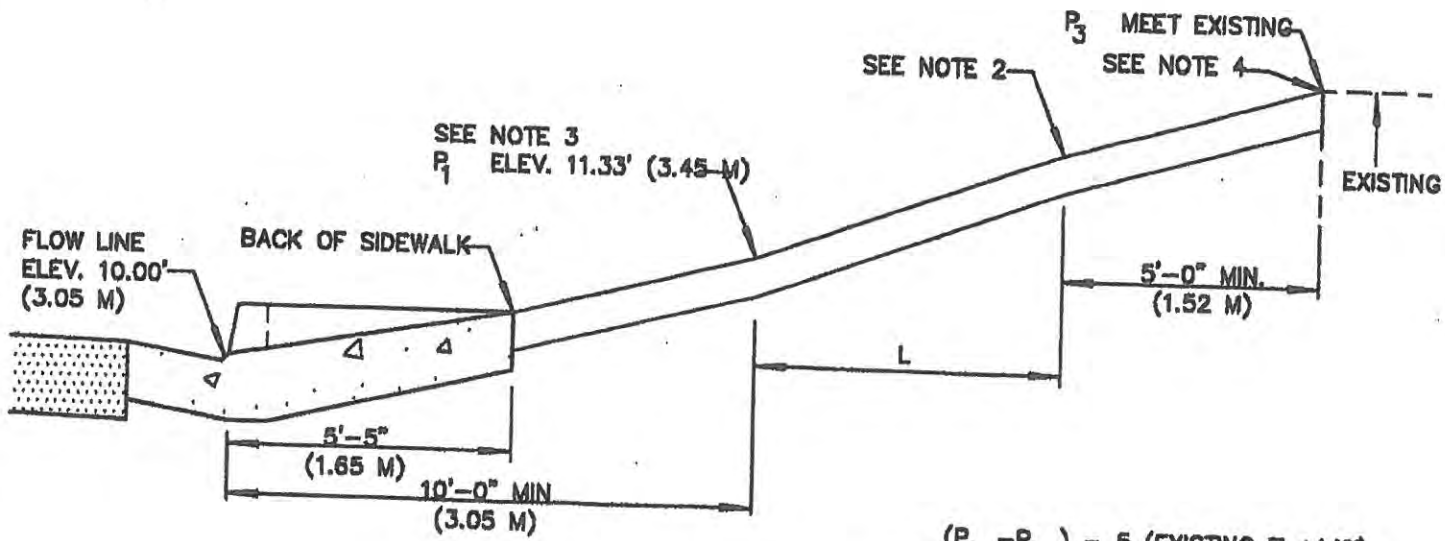

$$L = \frac{(P_3 - P_1) - 5\ (\text{EXISTING \%} + 14\%)}{0.15\ (0.25)}$$

SEE NOTE 2

CITY OF PACIFIC GROVE

STANDARD DETAILS FOR STREET IMPROVEMENTS

TITLE: UP THE DRIVEWAY

DESIGNED BY

DRAWN BY AP

CHECKED BY

APPROVED

CITY ENGINEER

RCE NO. 29411

DATE

DETAIL No. 103

NOTES:

1. ALL ELEVATIONS ARE AT LOW SIDE OF DRIVEWAY.
2. MAXIMUM ALLOWABLE GRADE IS 25%, RECOMMENDED GRADE IS 15%
3. MAXIMUM GRADE BREAK IS 15%
4. MAXIMUM RAMP BREAKOVER ANGLE IS 14%

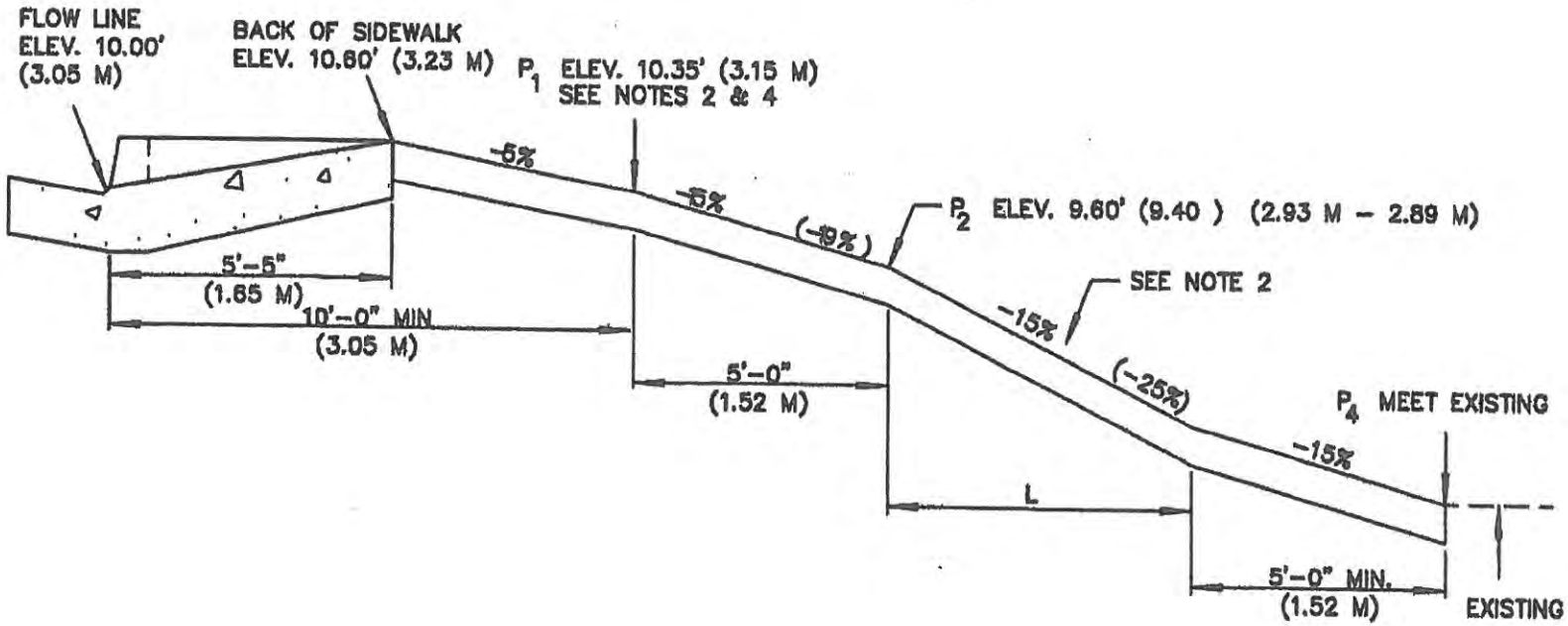

$$L = \frac{(P_2 - P_4) - 5\,(\text{EXISTING \% } -15\%)}{0.15 \quad (0.25)}$$

SEE NOTE 2

CITY OF PACIFIC GROVE

STANDARD DETAILS FOR STREET IMPROVEMENTS

TITLE: DOWN HILL DRIVEWAY

DESIGNED BY

DRAWN BY: AP

CHECKED BY

APPROVED

CITY ENGINEER

RCE NO. 29411

DATE

DETAIL No. 104

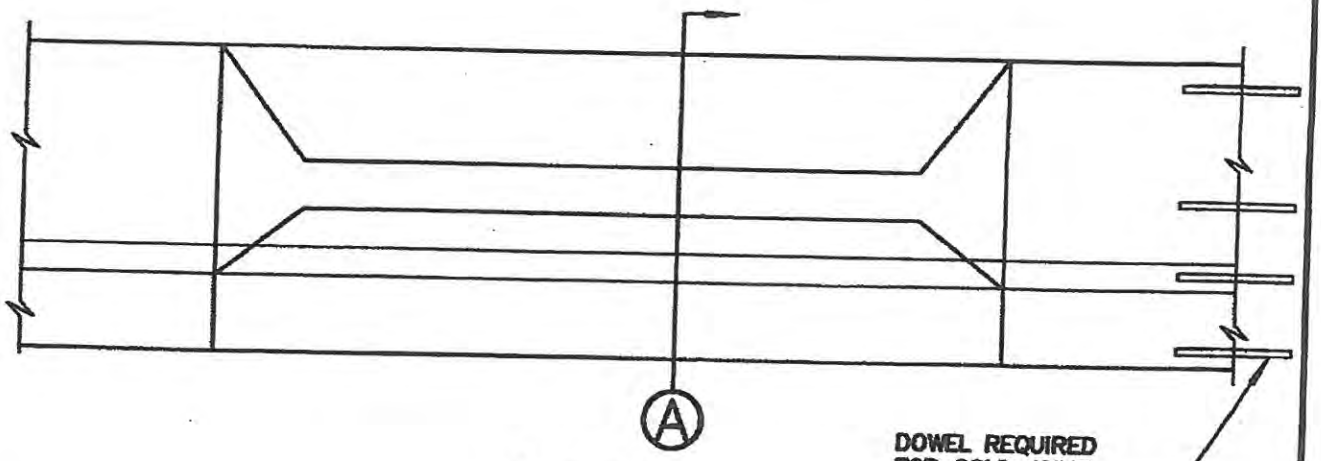

PLAN

FINISH: BROOM OVER STEEL TROWEL

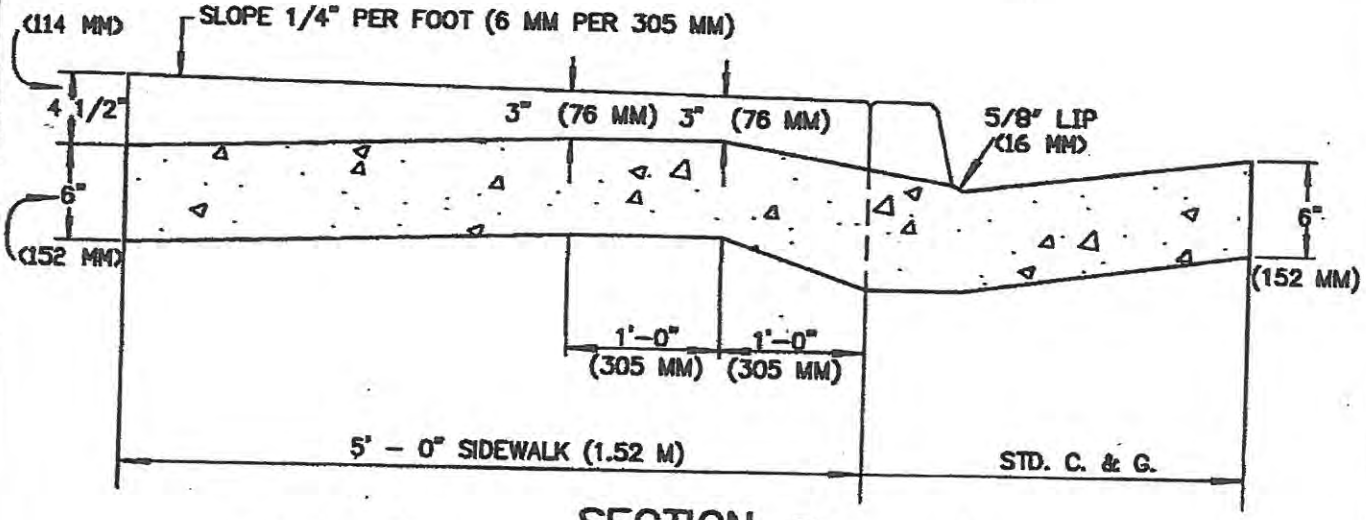

SECTION A

NOTES:

1. CONCRETE TO BE CLASS "B" (5 SACK) .
2. PLACE 6" CLASS 2 AGGREGATE BASE UNDER CURB & GUTTER AND DRIVEWAY.
3. ALL WORK SHALL BE DONE IN ACCORDANCE WITH SECTION 73 OF STATE OF CALIFORNIA DEPARTMENT OF TRANSPORTATION STANDARD SPECIFICATIONS.
4. SEE STANDARD DETAIL # 104 FOR CONTINUATION OF DRIVEWAY TOWARD GRADE.
5. TO BE USED ONLY WITH THE CITY ENGINEER'S APPROVAL.

CITY OF PACIFIC GROVE

STANDARD DETAILS FOR STREET IMPROVEMENTS

DESIGNED BY	TITLE "J" TYPE DRIVEWAY APPROACH	
DRAWN BY AP	APPROVED DATE	DETAIL No.
CHECKED BY	CITY ENGINEER RCE NO. 29411	105

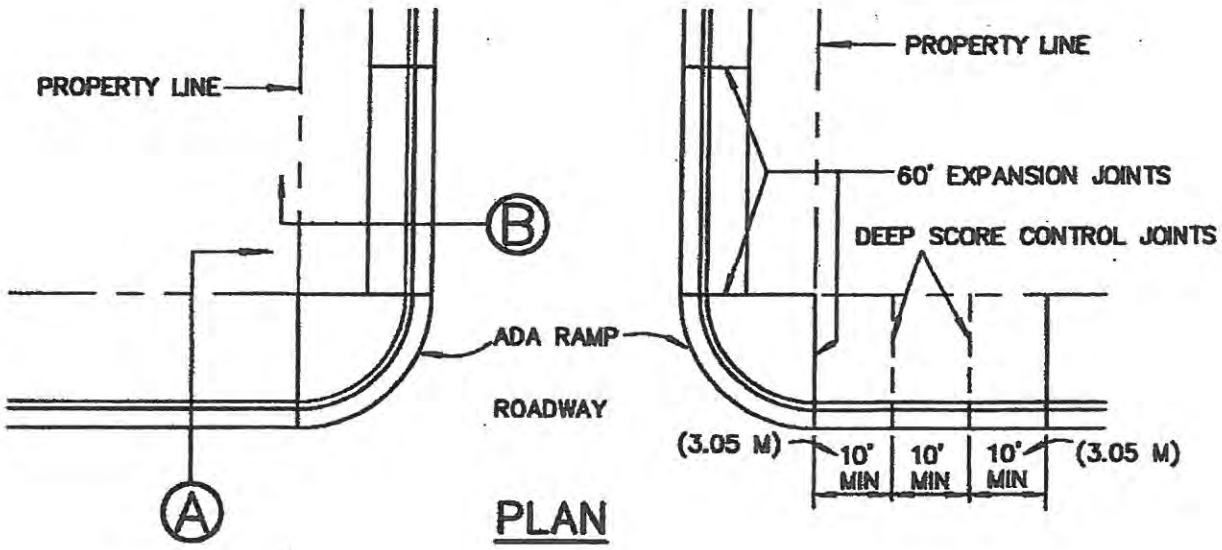

PLAN

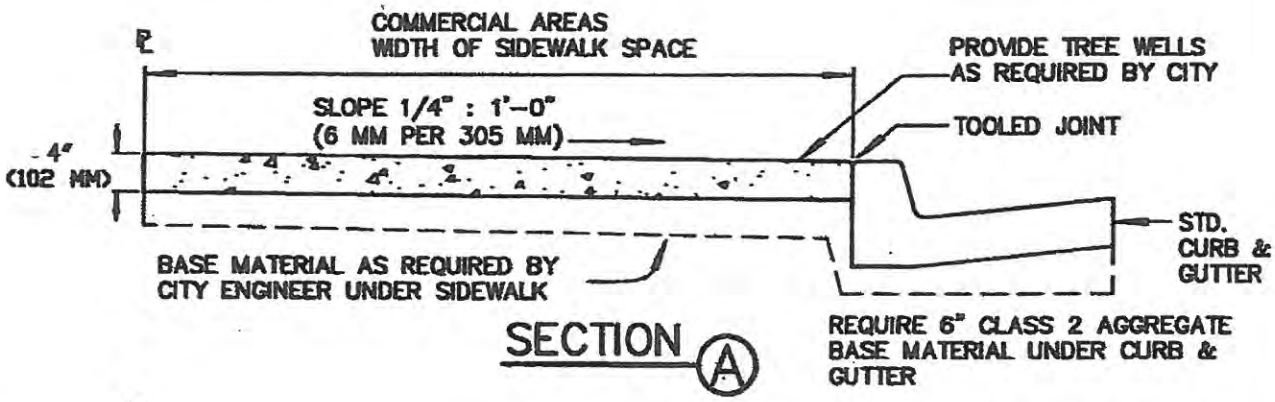

SECTION A

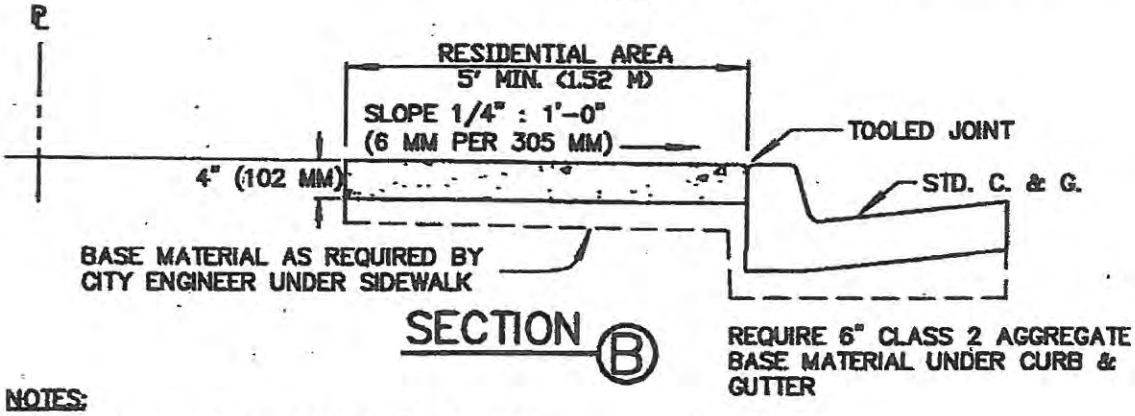

SECTION B

NOTES:

1. CONCRETE TO BE CLASS "B" (5 SACK) .
2. ALL WORK SHALL BE DONE IN ACCORDANCE WITH SECTION 73 OF STATE OF CALIFORNIA DEPARTMENT OF TRANSPORTATION STANDARD SPECIFICATIONS.
3. FINISH SHALL BE BROOM OVER STEEL TROWEL OTHER FINISHES SUBJECT TO CITY APPROVAL INCLUDING COLORS.

CITY OF PACIFIC GROVE		
STANDARD DETAILS FOR STREET IMPROVEMENTS		
DESIGNED BY	TITLE SIDEWALK	
DRAWN BY AP	APPROVED	DATE
CHECKED BY	CITY ENGINEER	RCE NO. 29411
		DETAIL No. 106

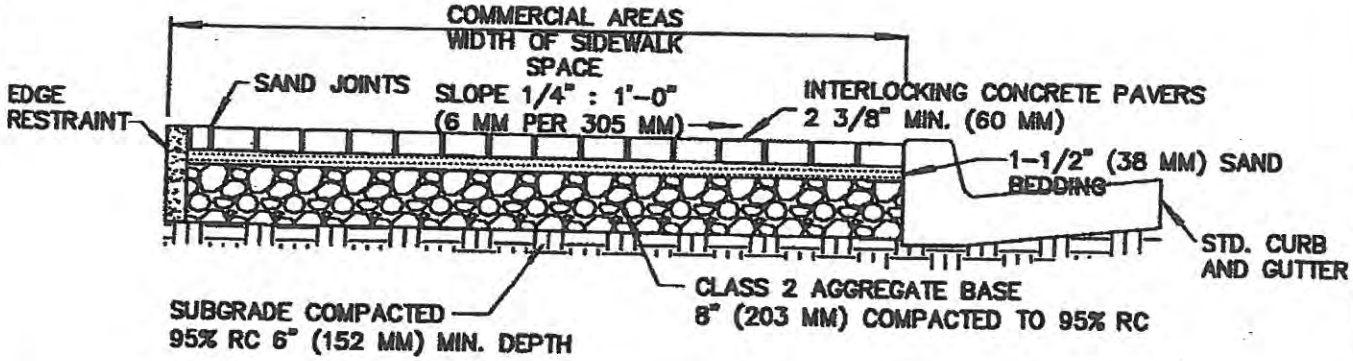

COMMERCIAL

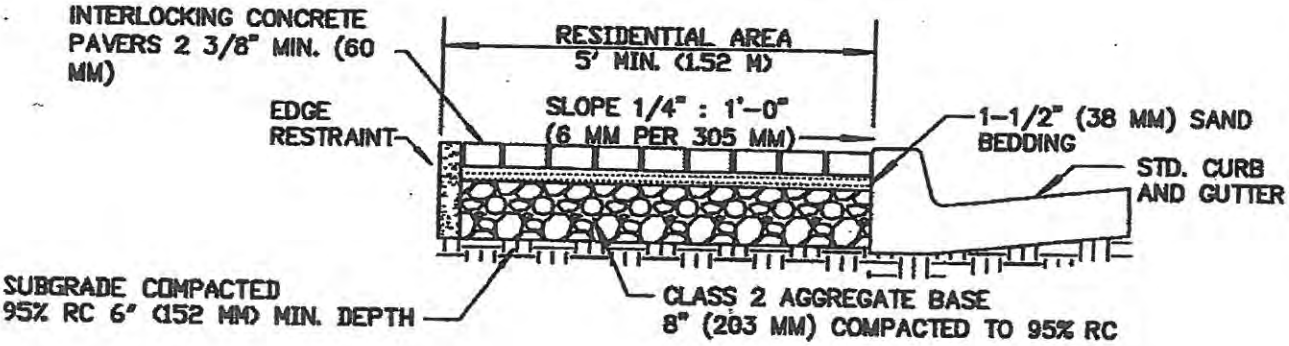

RESIDENTIAL

PAVERS NOT PERMITTED FOR DRIVEWAY APPROACHES

NOTES:

1. THE STYLE AND COLOR OF THE INTERLOCKING PAVERS SHALL BE APPROVED BY THE CITY ENGINEER.
2. ALL JOINTS PAVERS SHALL BE FILLED WITH MASONS SAND AND COMPACTED WITH A VIBRATOR PLATE. SWEEP OFF ANY EXCESS SAND.
3. PAVER STONES SHALL BE INSTALLED 1/4" ABOVE FINAL GRADE
4. ALL PAVER EDGES SHALL BE CONSTRAINED USING FLUSH CONCRETE CURB, PLASTIC EDGING, OR ALUMINUM/STEEL EDGING.

CITY OF PACIFIC GROVE		
STANDARD DETAILS FOR STREET IMPROVEMENTS		
DESIGNED BY	TITLE ALTERNATE SIDEWALK (CONCRETE PAVERS)	
DRAWN BY AP	APPROVED DATE	DETAIL No.
CHECKED BY	CITY ENGINEER RCE NO. 29411	106A

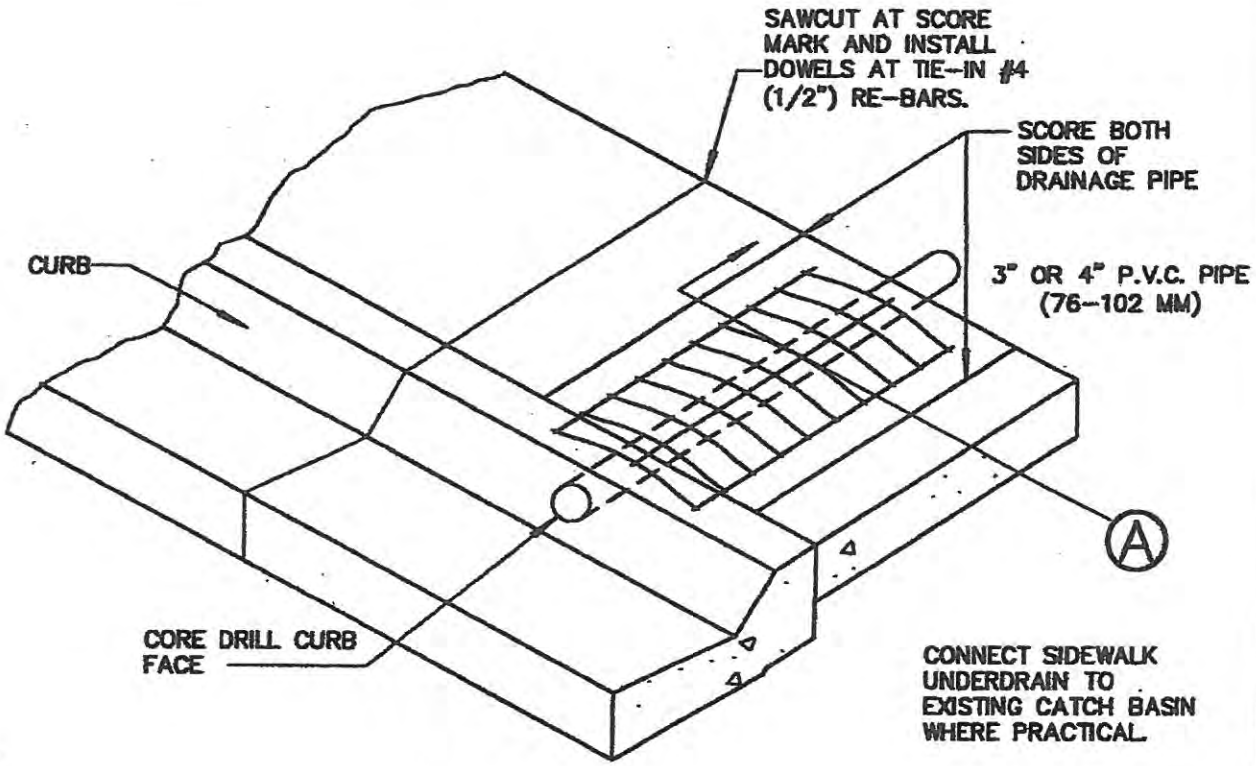

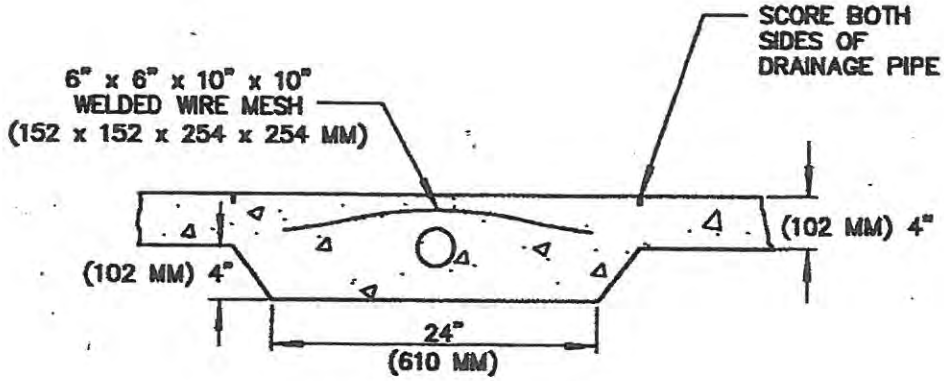

SECTION A

REMOVE SIDEWALK SECTION TO NEAREST SCORE JOINT

CITY OF PACIFIC GROVE		
STANDARD DETAILS FOR STREET IMPROVEMENTS		
DESIGNED BY	TITLE SIDEWALK UNDERDRAIN	
DRAWN BY AP	APPROVED DATE	DETAIL No.
CHECKED BY	CITY ENGINEER RCE NO. 29411	107

SEE STATE OF CALIFORNIA
DEPARTMENT OF TRANSPORTATION
STANDARD PLANS RSP A88A

CITY OF PACIFIC GROVE

STANDARD DETAILS FOR STREET IMPROVEMENTS

DESIGNED BY	TITLE CURB RAMP		
DRAWN BY AP	APPROVED	DATE	DETAIL No.
CHECKED BY	CITY ENGINEER	RCE NO. 29411	108

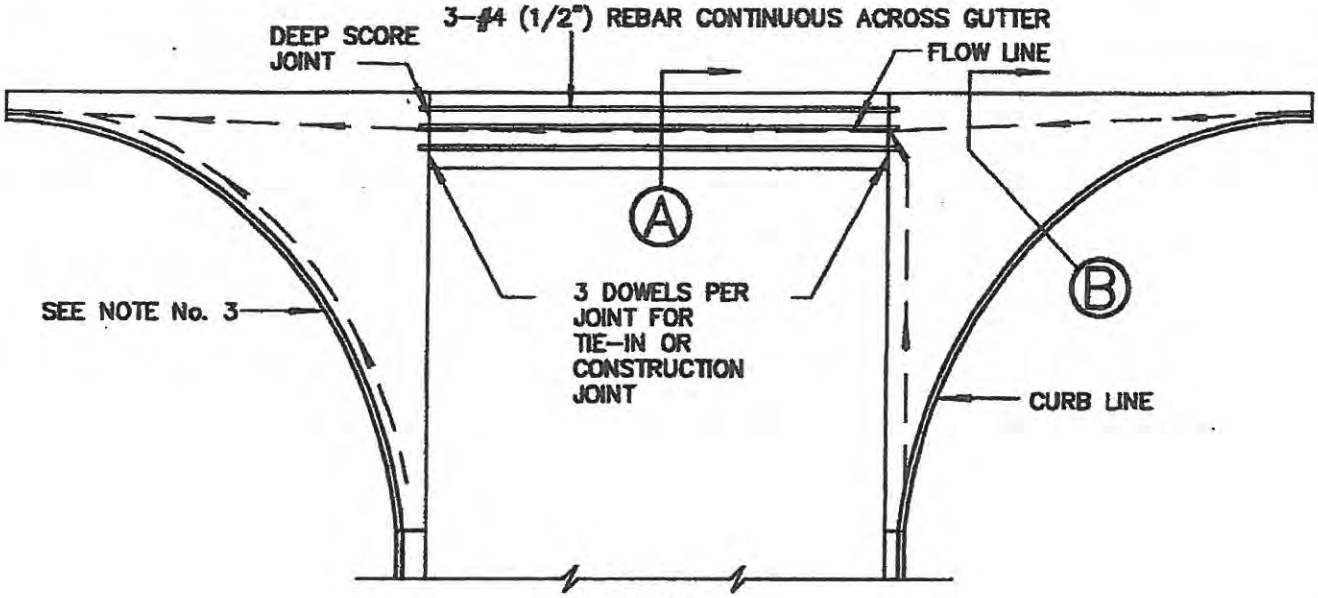

PLAN

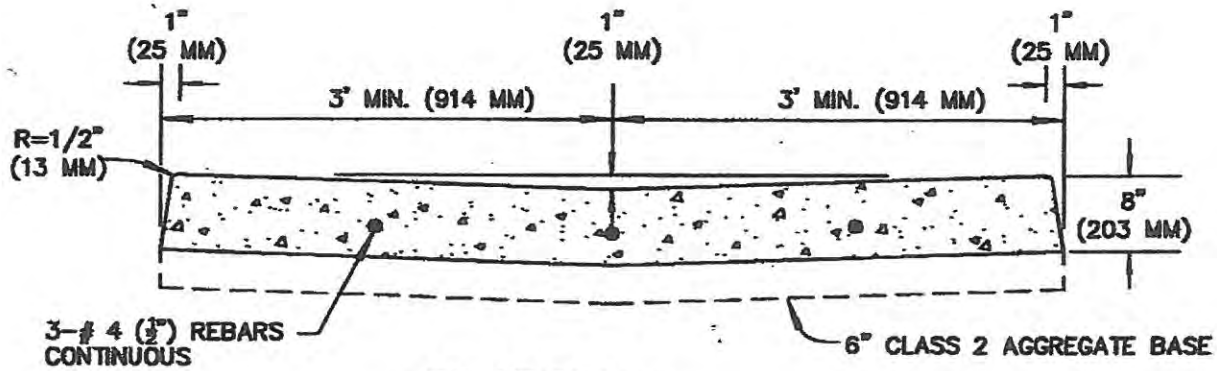

SECTION A

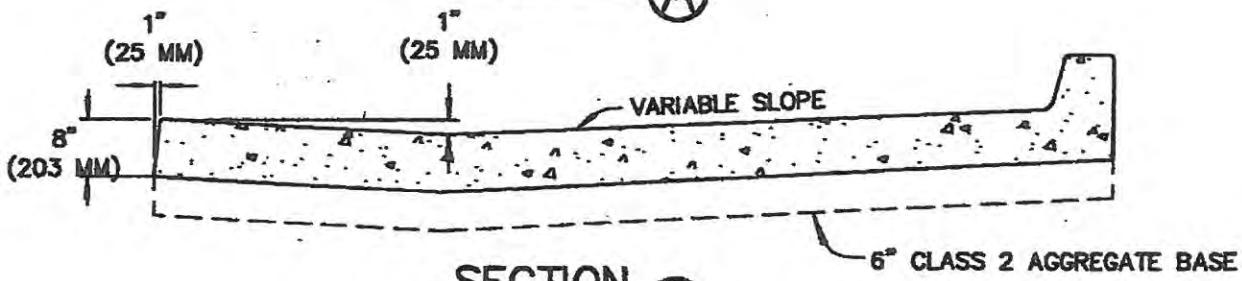

SECTION B

NOTES:

1. CONCRETE TO BE CLASS "B" (5 SACK) .
2. FINISH SHALL BE BROOM OVER STEEL TROWEL.
3. PROVIDE CURB RAMPS AS REQUIRED.

CITY OF PACIFIC GROVE			
STANDARD DETAILS FOR STREET IMPROVEMENTS			
DESIGNED BY	TITLE OPEN CROSS GUTTER		
DRAWN BY AP	APPROVED	DATE	DETAIL No.
CHECKED BY	CITY ENGINEER	RCE NO. 29411	109

REMOVE FULL SECTION OF SIDEWALK,
SAWCUT MUST BE MADE AT JOINT OR GROOVE.

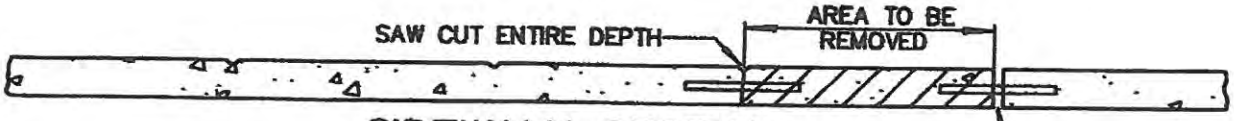

SIDEWALK SECTION

1" = 2'
(25 MM = 610 MM)

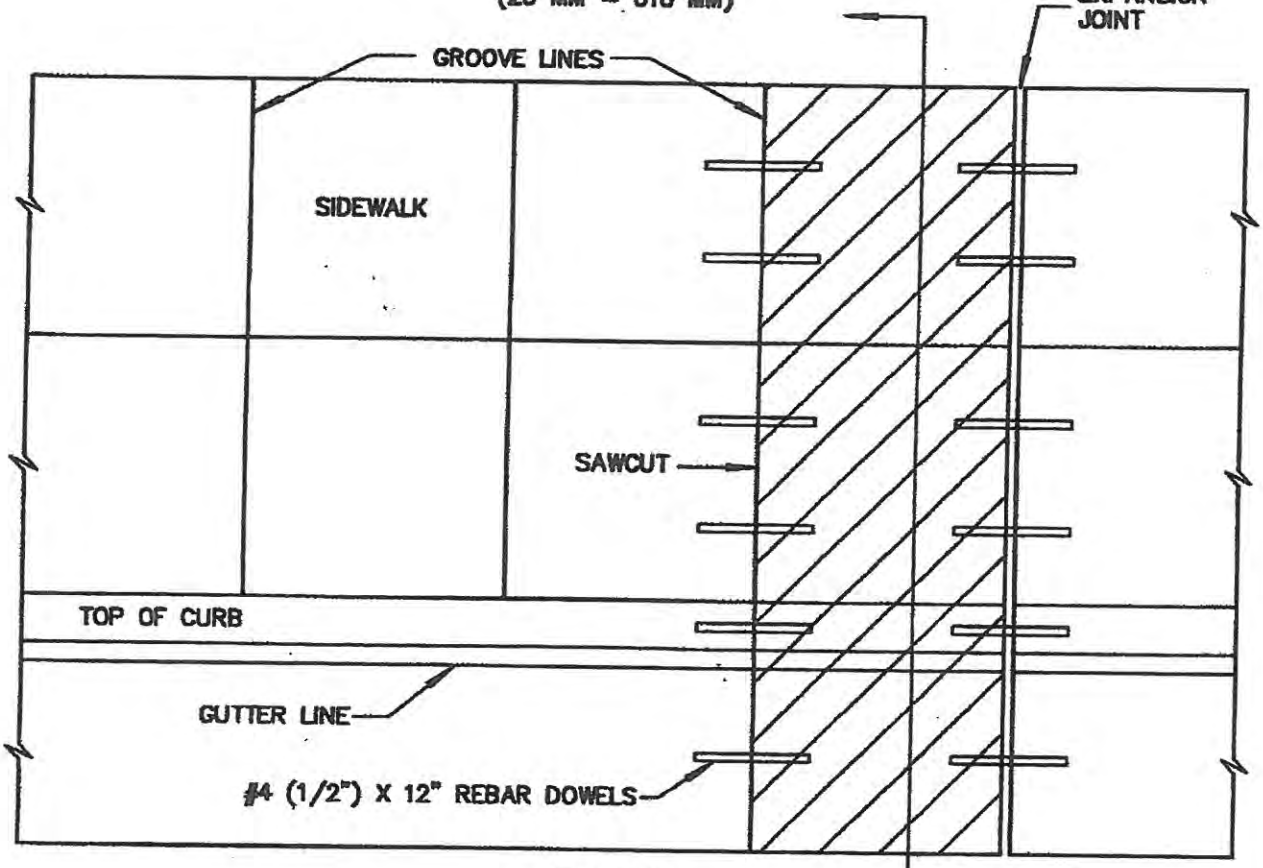

PLAN

1" = 2'
(25 MM = 610 MM)

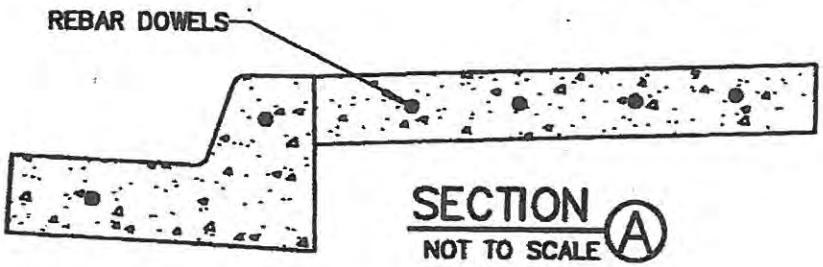

SECTION A

NOT TO SCALE

CUT WITH ABRASIVE TYPE CUTTING WHEEL. REMAINING EDGE SHALL BE SMOOTH AND TRUE, NO SHATTER.

CITY OF PACIFIC GROVE

STANDARD DETAILS FOR STREET IMPROVEMENTS

DESIGNED BY	TITLE REMOVAL OF CONCRETE CURB AND SIDEWALK	
DRAWN BY AP	APPROVED DATE	DETAIL No.
CHECKED BY	CITY ENGINEER RCE NO. 29411	110

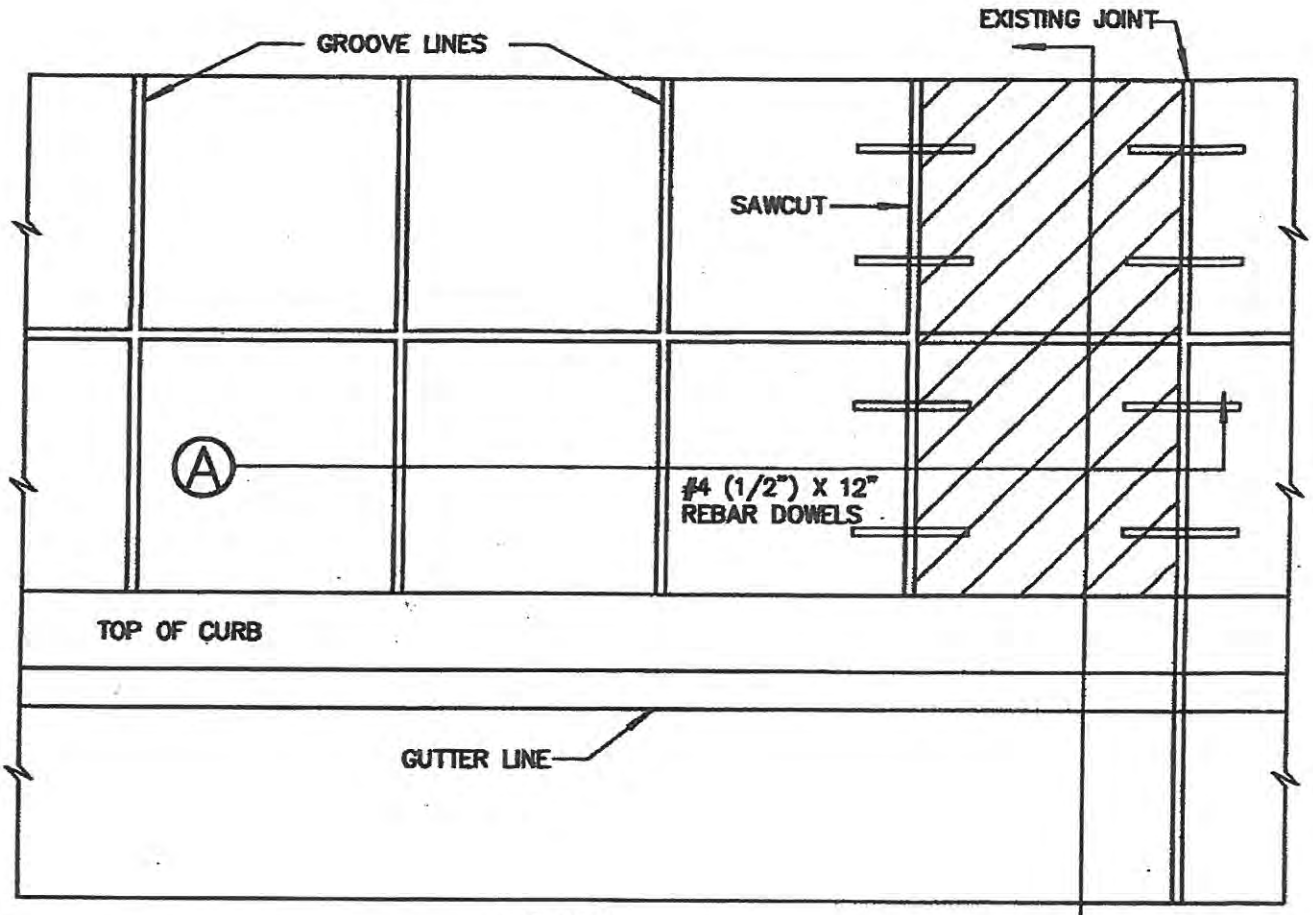

PLAN
1" = 2'
(25 MM = 610 MM)

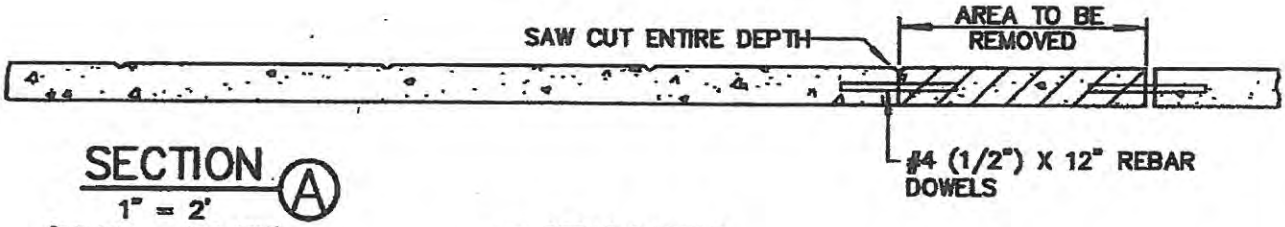

SECTION A
1" = 2'
(25 MM = 610 MM)

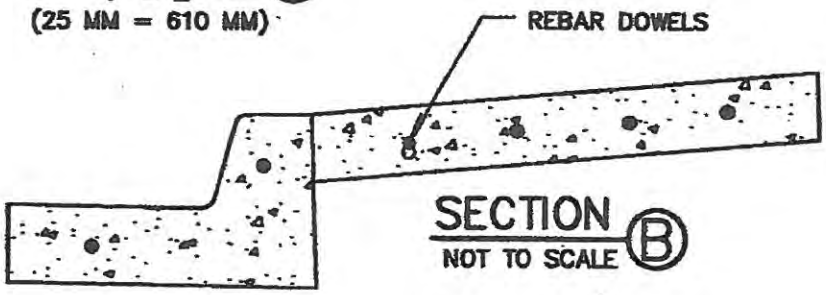

SECTION B
NOT TO SCALE

REMOVE FULL SECTION OF SIDEWALK. SAWCUT MUST BE MADE AT JOINT OR GROOVE. FINISHED SURFACE OF REPLACED SECTION SHALL BE UNIFORM SLOPE BETWEEN EXISTING SECTIONS.

CITY OF PACIFIC GROVE		
STANDARD DETAILS FOR STREET IMPROVEMENTS		
DESIGNED BY	TITLE REPLACEMENT OF CONCRETE SIDEWALK	
DRAWN BY AP	APPROVED DATE	DETAIL No.
CHECKED BY	CITY ENGINEER RCE NO. 29411	111

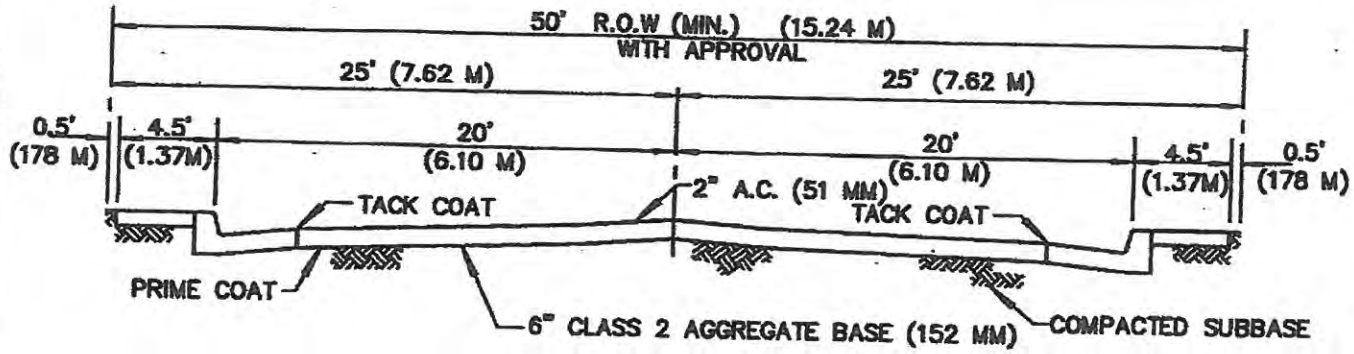

RESIDENTIAL

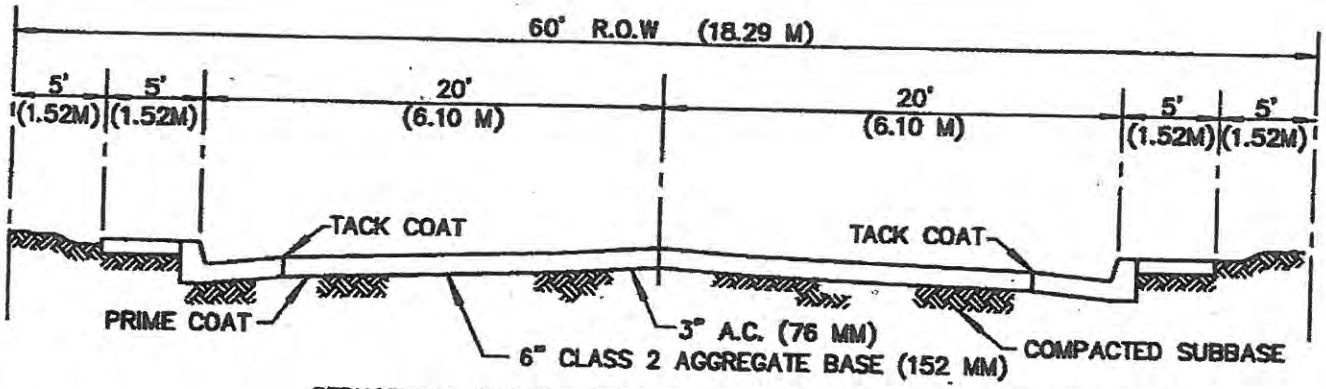

STRUCTURAL SECTION SUBJECT TO REVIEW BASED ON SOIL CONDITIONS

RESIDENTIAL OR COLLECTOR

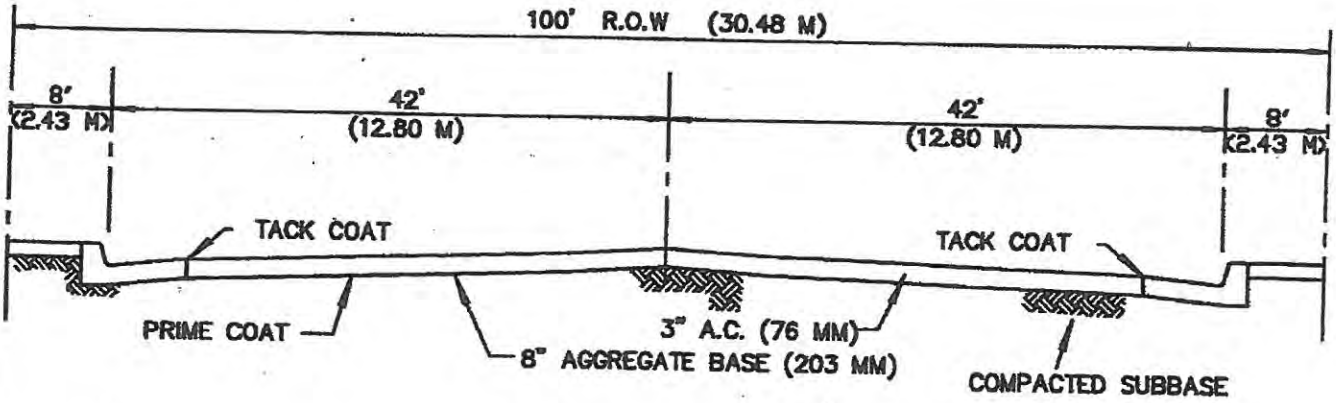

ARTERIAL

CITY OF PACIFIC GROVE			
STANDARD DETAILS FOR STREET IMPROVEMENTS			
DESIGNED BY	TITLE TYPICAL STREET SECTIONS		
DRAWN BY AP	APPROVED	DATE	DETAIL No.
CHECKED BY	CITY ENGINEER	RCE NO. 29411	112

CURBS AT SAME ELEVATION

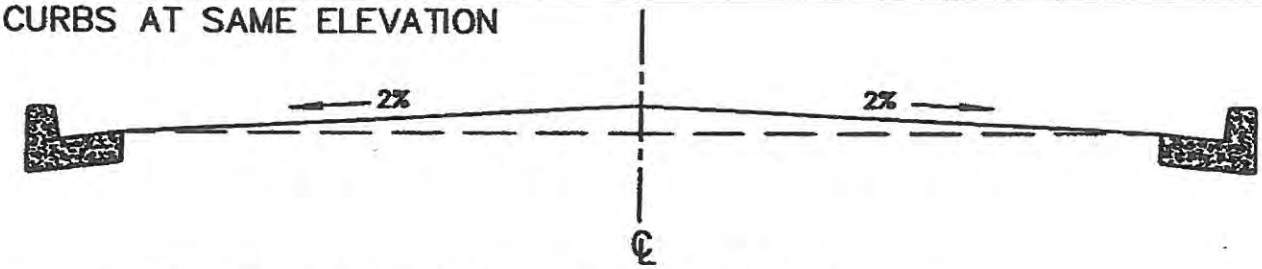

A. STANDARD CROWN – LEVEL SECTION

D VARIES FROM W/2 TO W/3 TO SUIT PAVER WIDTH AND INDIVIDUAL STREET CONDITIONS, TO BE DETERMINED BY THE ENGINEER.

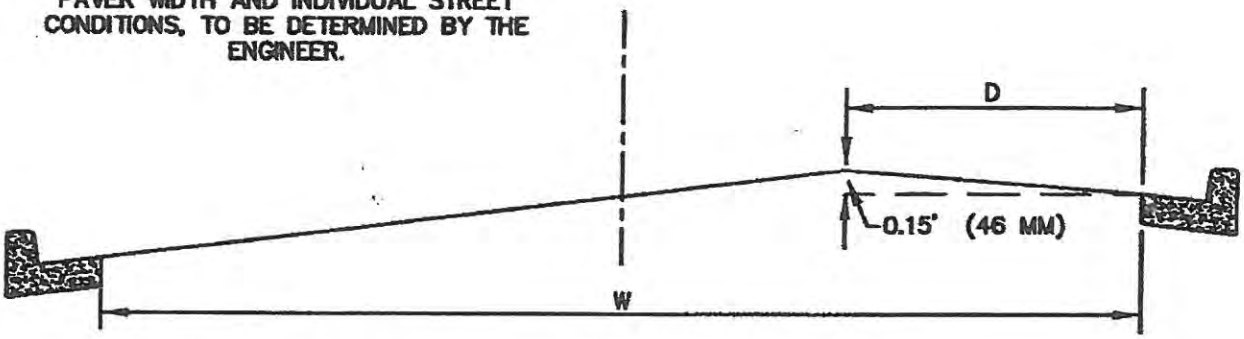

B. STANDARD CROWN – TILTED SECTION

WHEN GRADE BETWEEN ℄ AND LOW CURB EXCEEDS 7%, USE "D" STANDARD.

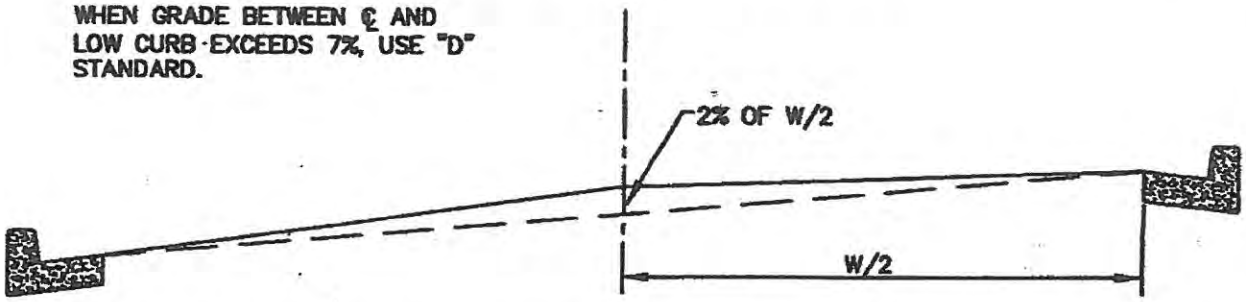

C. "FALSE" CROWN – TILTED SECTION

D.

SLOPE SECTION

PERMITTED ONLY ON EXISTING STREETS.

CITY OF PACIFIC GROVE

STANDARD DETAILS FOR STREET IMPROVEMENTS

DESIGNED BY	TITLE CROWNS		
DRAWN BY AP	APPROVED	DATE	DETAIL No. 113
CHECKED BY	CITY ENGINEER	RCE NO. 29411	

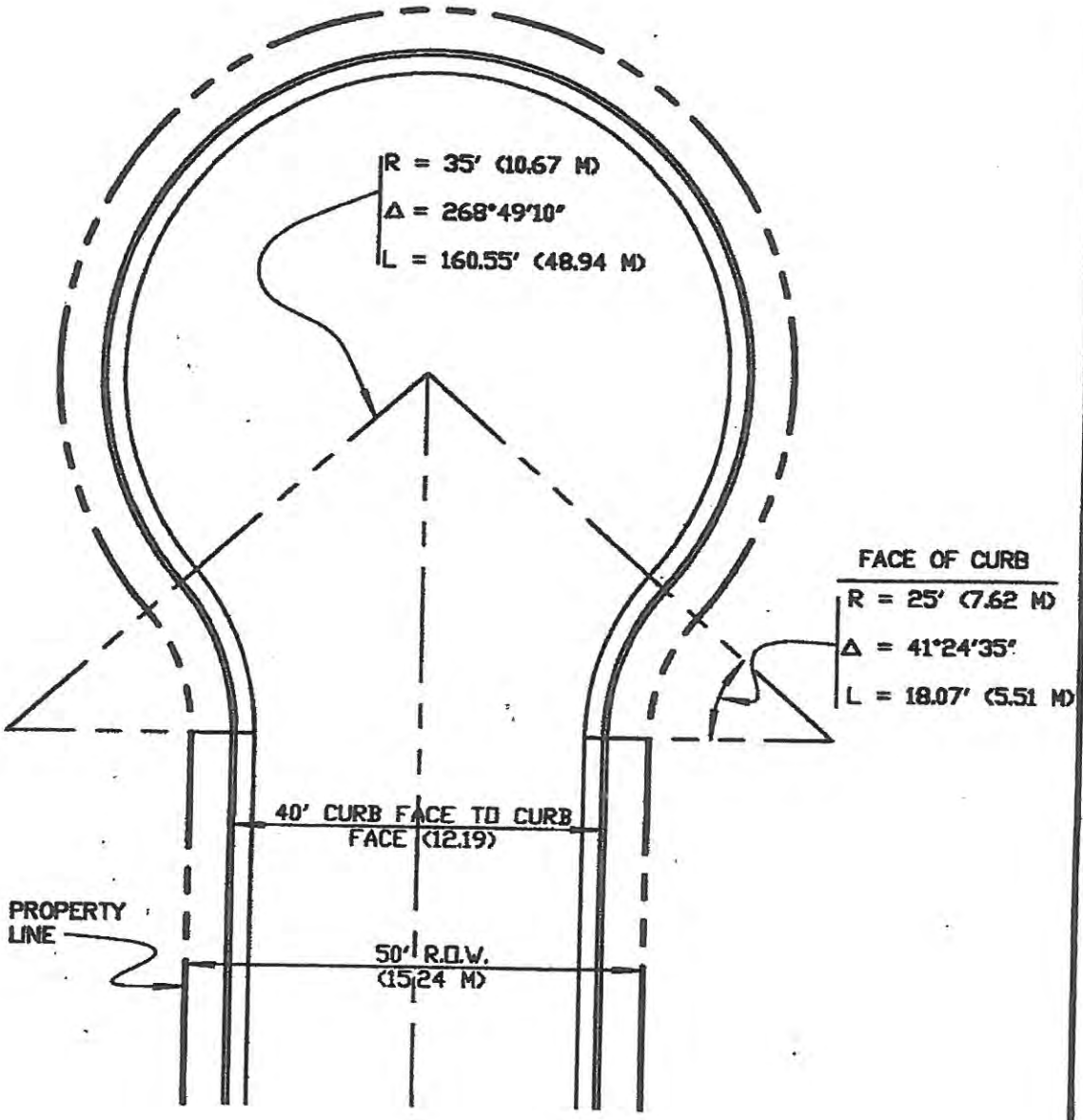

CITY OF PACIFIC GROVE			
STANDARD DETAILS FOR STREET IMPROVEMENTS			
DESIGNED BY	TITLE	CUL-DE-SAC	
DRAWN BY AP	APPROVED	DATE	DETAIL No.
CHECKED BY	CITY ENGINEER	RCE NO. 29411	114

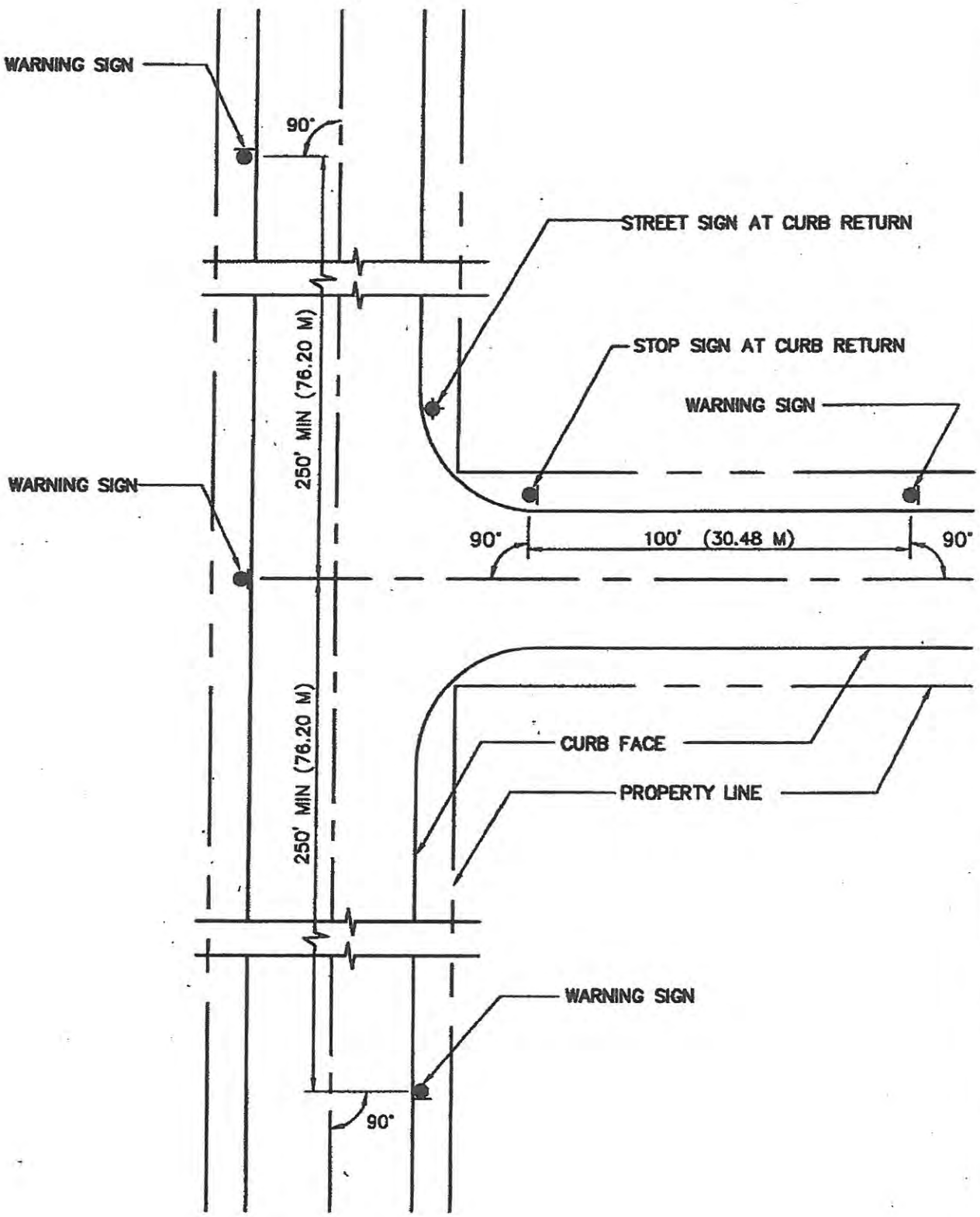

CITY OF PACIFIC GROVE

STANDARD DETAILS FOR STREET IMPROVEMENTS

DESIGNED BY	TITLE STREET SIGN LOCATIONS		
DRAWN BY AP	APPROVED	DATE	DETAIL No.
CHECKED BY	CITY ENGINEER	RCE NO. 29411	115

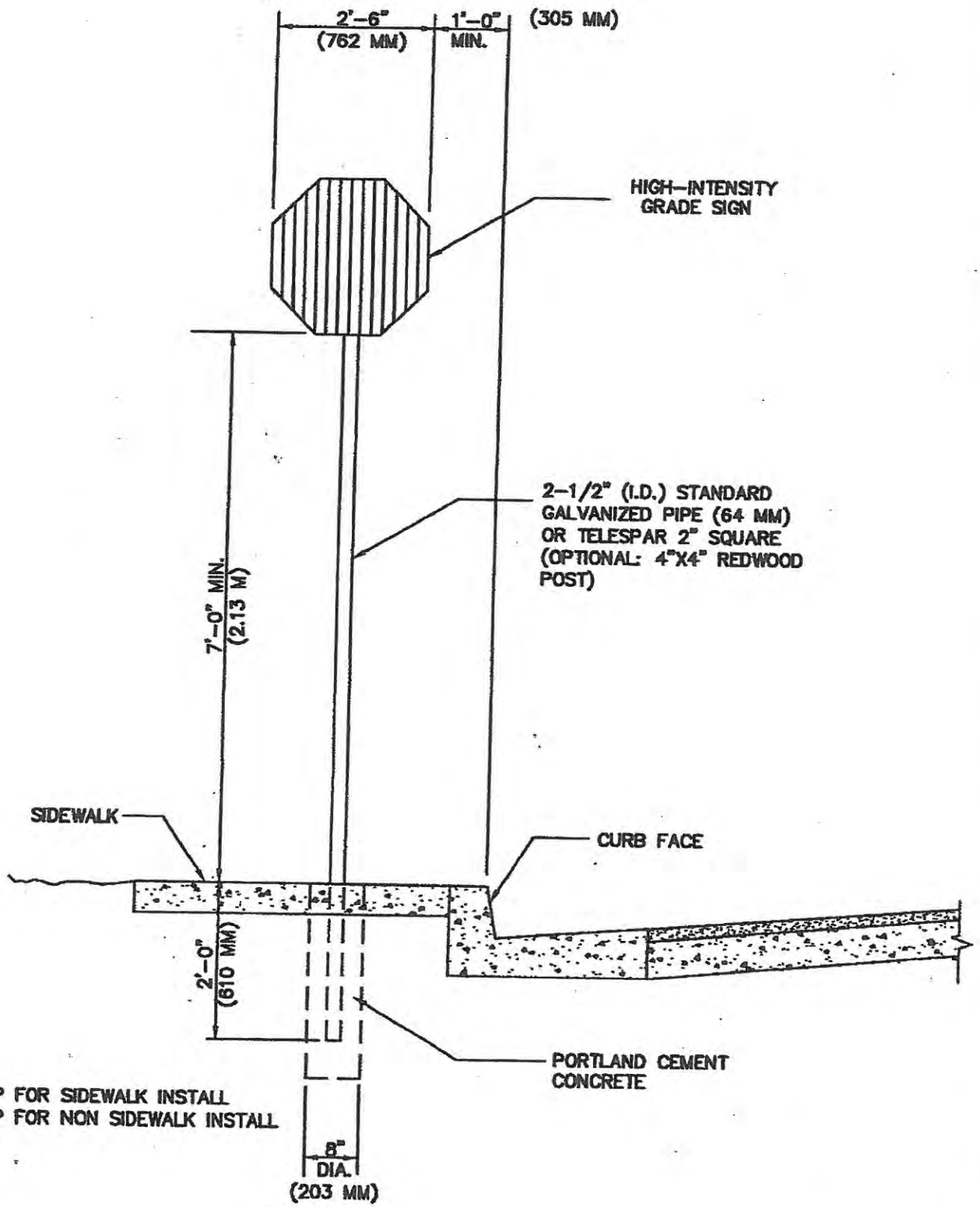

NOTE:
2' DEEP FOR SIDEWALK INSTALL
3' DEEP FOR NON SIDEWALK INSTALL

CITY OF PACIFIC GROVE			
STANDARD DETAILS FOR STREET IMPROVEMENTS			
DESIGNED BY	TITLE GENERAL SIGN INSTALLATION		
DRAWN BY AP	APPROVED	DATE	DETAIL No.
CHECKED BY	CITY ENGINEER	RCE NO. 29411	116

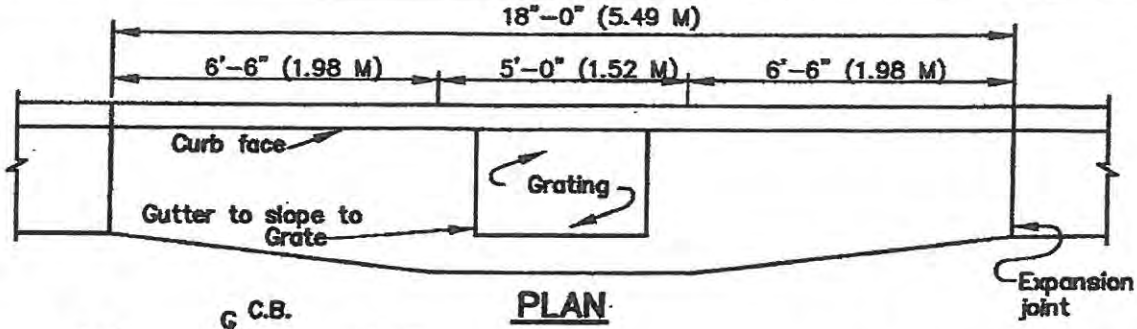

PLAN

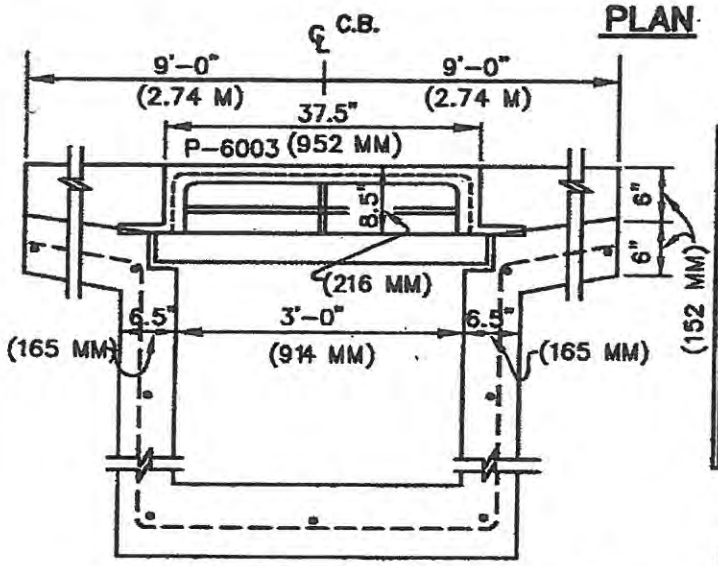

FRONT PROFILE

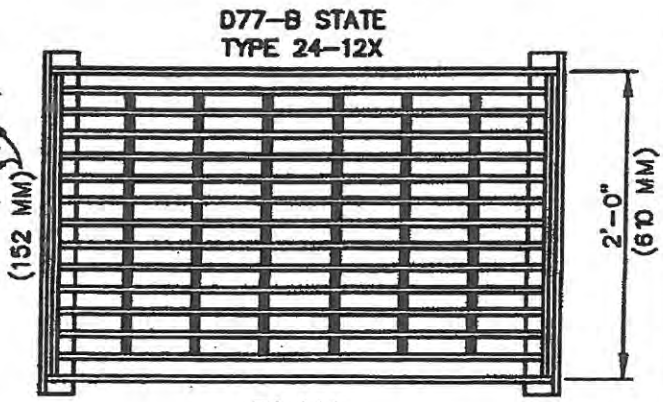

PLAN

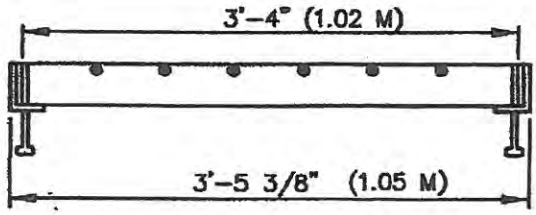

SECTION

FRAME & GRATE

3/4"=1'-0'
(19 MM = 305 MM)

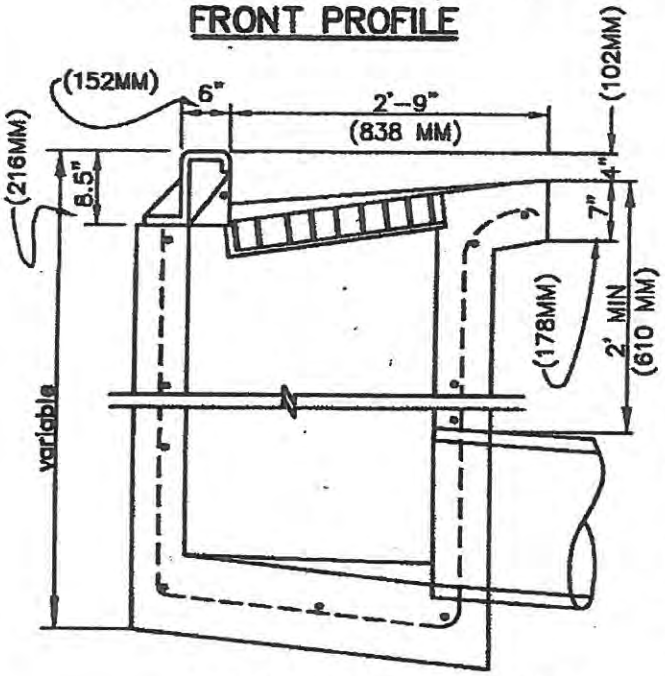

SECTION

1/2"=1'-0"
(13 MM = 305 MM)

NOTE:

OPTIONAL-USE CALTRANS DETAIL

1. ALL CONCRETE SHALL BE CLASS "B"
2. HOOD FOR CATCH BASIN SHALL BE OF TOUGH GRAY IRON FREE FROM DEFECTS
3. FRAME AND GRATE SHALL BE GALVANIZED STEEL.
4. NUMBERS REFER TO PHOENIX IRON WORKS OR STATE.
5. A 5/8" BAR STOCK PROTECTION BAR SHALL BE PLACED HORIZONTALLY ACROSS CURB OPENING.
6. REINFORCING STEEL WHEN THE HEIGHT IS 0' TO 4'-0" USE #3 @ 18" o.c. ea. way 10' OR MORE REQUIRES SPECIAL DESIGN.

CITY OF PACIFIC GROVE

STANDARD DETAILS FOR STREET IMPROVEMENTS

DESIGNED BY	TITLE	CATCH BASIN	
DRAWN BY AP	APPROVED	DATE	DETAIL No.
CHECKED BY	CITY ENGINEER	RCE NO. 29411	117

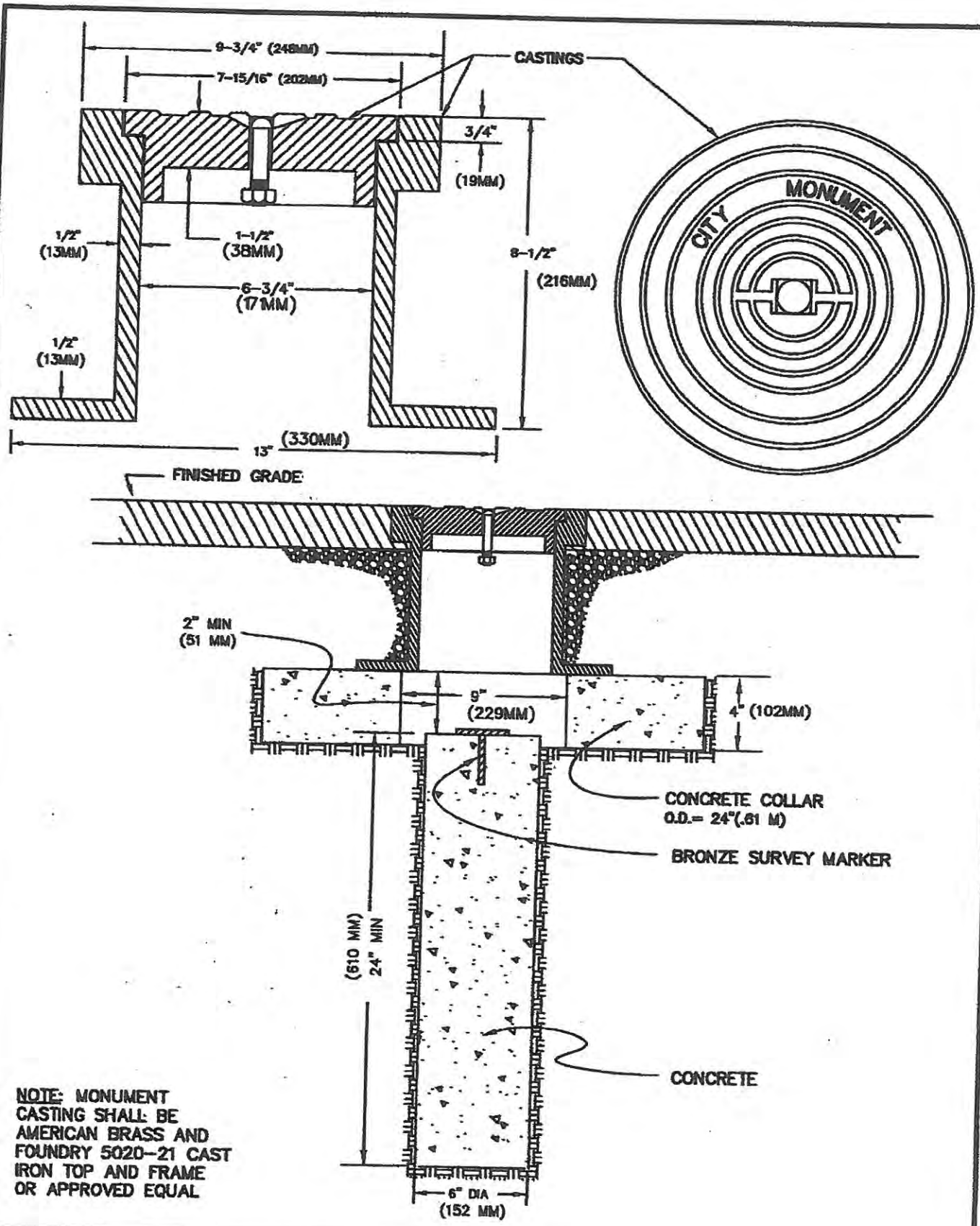

NOTE: MONUMENT CASTING SHALL BE AMERICAN BRASS AND FOUNDRY 5020-21 CAST IRON TOP AND FRAME OR APPROVED EQUAL

CITY OF PACIFIC GROVE

STANDARD DETAILS FOR STREET IMPROVEMENTS

DESIGNED BY	TITLE	MONUMENT	
DRAWN BY AP	APPROVED	DATE	DETAIL No.
CHECKED BY	CITY ENGINEER	RCE NO. 29411	118

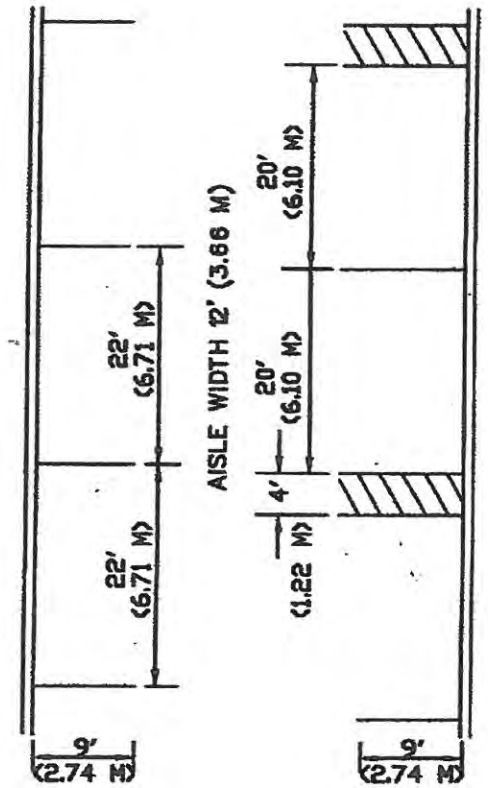

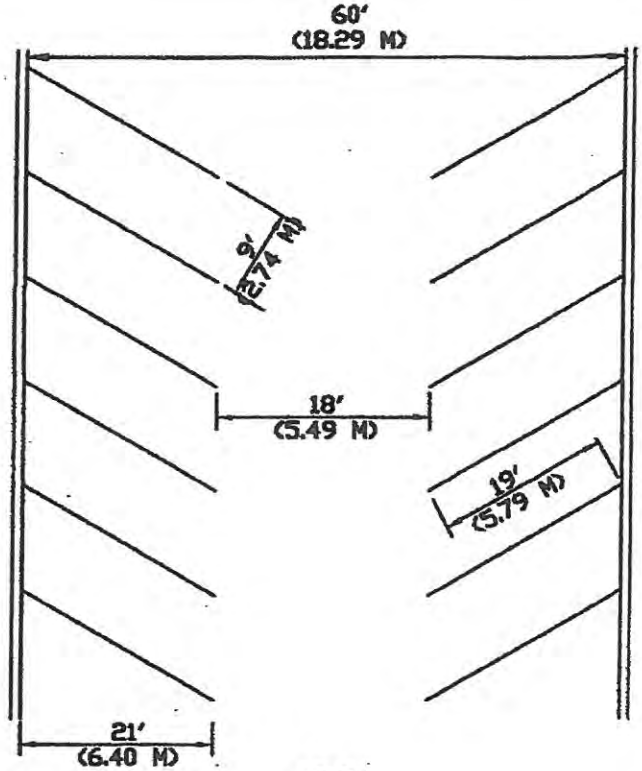

60°

NOTE:

REFER TO TITLE 24 ADA REQUIREMENTS FOR ADA PARKING

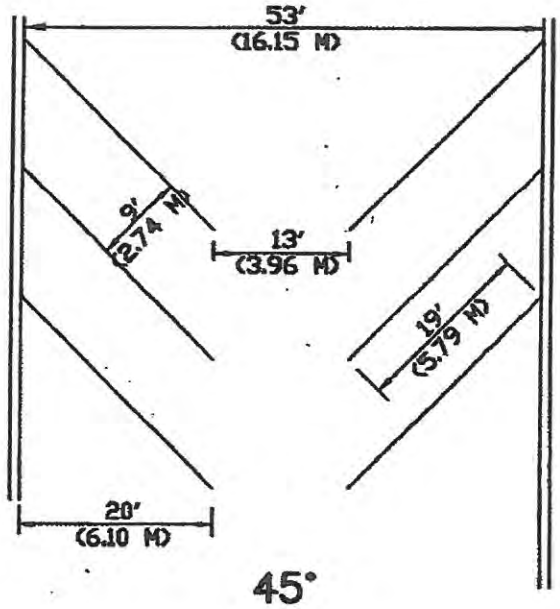

45°

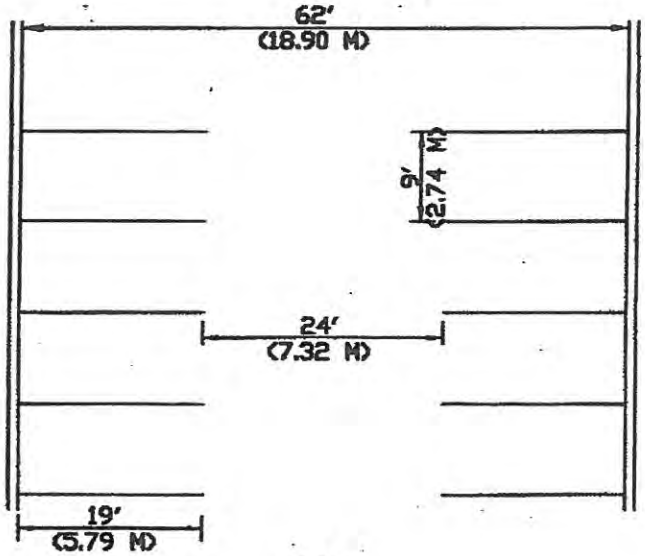

90°

CITY OF PACIFIC GROVE

STANDARD DETAILS FOR STREET IMPROVEMENTS

DESIGNED BY	TITLE PARKING LAYOUTS		
DRAWN BY AP	APPROVED	DATE	DETAIL No.
CHECKED BY	CITY ENGINEER	RCE NO. 29411	120

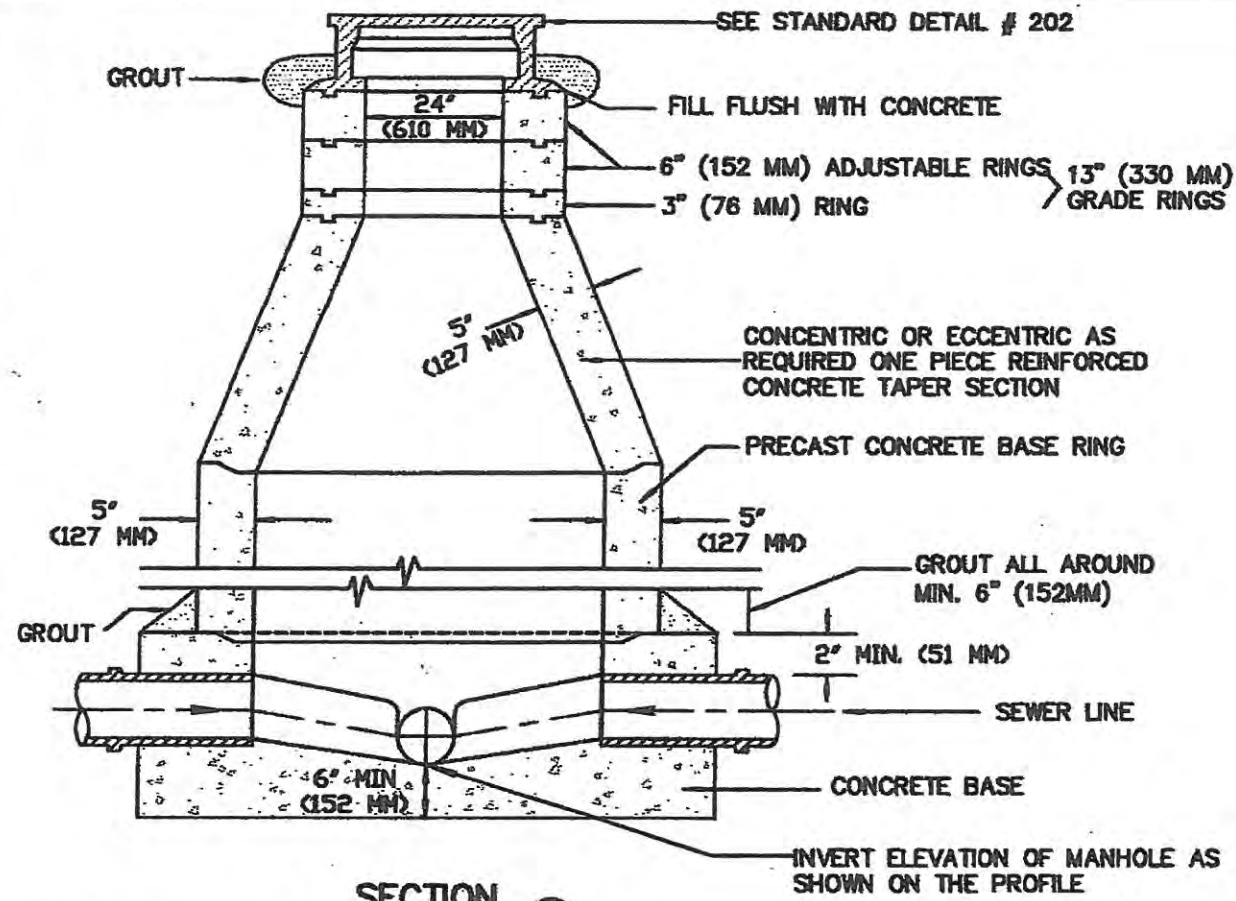

SECTION Ⓐ

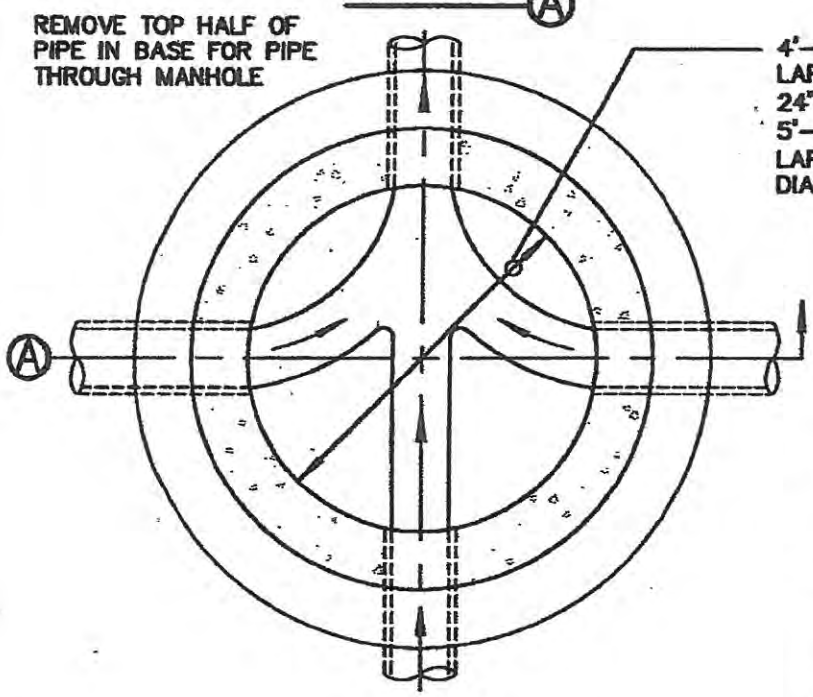

PLAN

NOTE:

1. CAST-IN-PLACE CONCRETE SHALL BE 3000 PSI. (210 KG/SQ. CM) PORTLAND CEMENT CONCRETE.
2. ALL JOINTS SHALL BE BEDDED IN MASTIC SEALER AND CEMENT MORTARED.
3. FIRST JOINT ON ALL PIPES SHALL BE 1 FT. (305 MM) MAX. OUTSIDE OF MANHOLE BASE.
4. RISER SECTION SHALL BE REINFORCED PRECAST CONCRETE COMPLYING WITH ASTM C-478.

CITY OF PACIFIC GROVE

STANDARD DETAILS FOR STREET IMPROVEMENTS

DESIGNED BY	TITLE STANDARD MANHOLE		
DRAWN BY AP	APPROVED	DATE	DETAIL No.
CHECKED BY	CITY ENGINEER	RCE NO. 29411	200

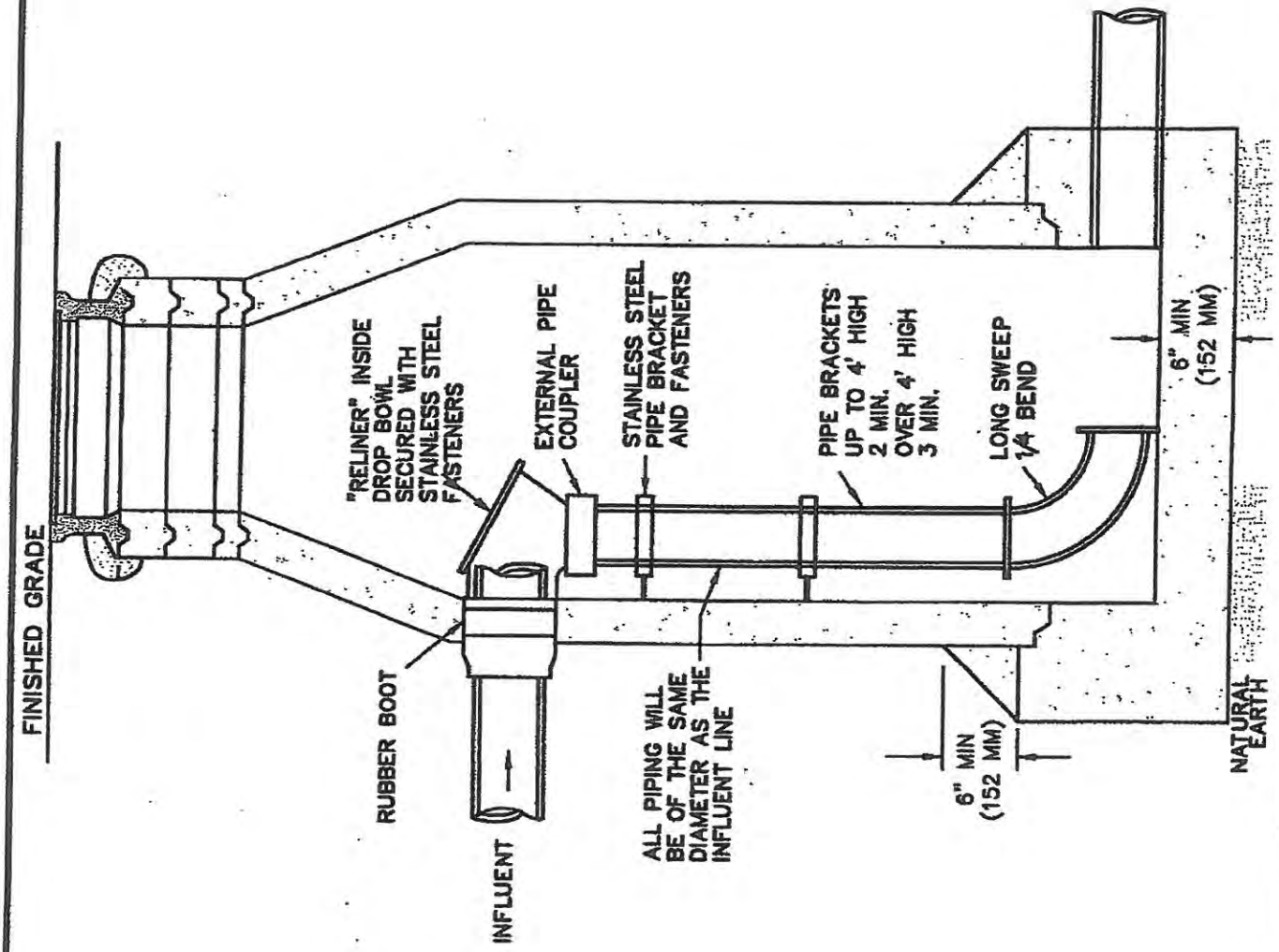

NOTES:

1. SEE STANDARD MANHOLE FOR MORE DETAILS.
2. MUST HAVE CITY ENGINEER APPROVAL FOR USE.

CITY OF PACIFIC GROVE		
STANDARD DETAILS FOR STREET IMPROVEMENTS		
DESIGNED BY	TITLE CONCRETE INTERNAL DROP MANHOLE	
DRAWN BY AP	APPROVED DATE	DETAIL No.
CHECKED BY	CITY ENGINEER RCE NO. 29411	201A

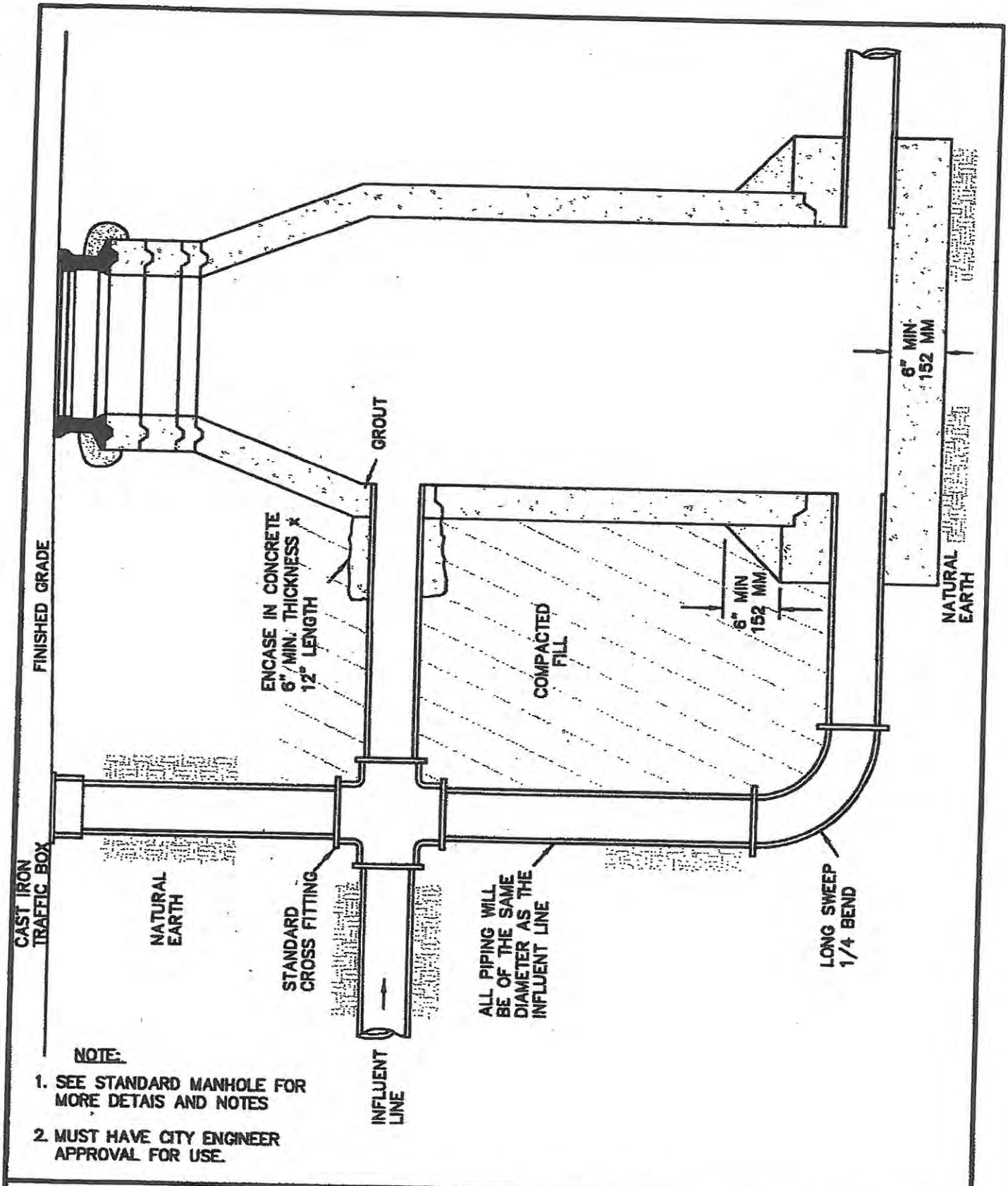

NOTE:

1. SEE STANDARD MANHOLE FOR MORE DETAIS AND NOTES
2. MUST HAVE CITY ENGINEER APPROVAL FOR USE.

CITY OF PACIFIC GROVE

STANDARD DETAILS FOR STREET IMPROVEMENTS

DESIGNED BY	TITLE CONCRETE EXTERNAL DROP MANHOLE	
DRAWN BY AP	APPROVED	DATE
CHECKED BY	CITY ENGINEER	RCE NO. 29411
		DETAIL No. 201B

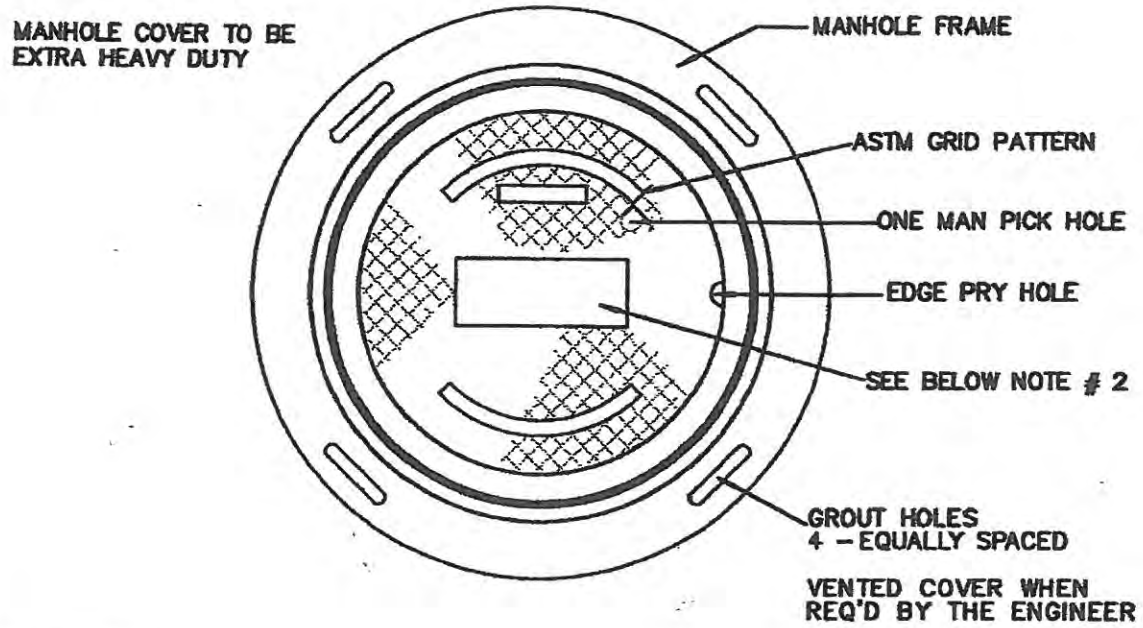

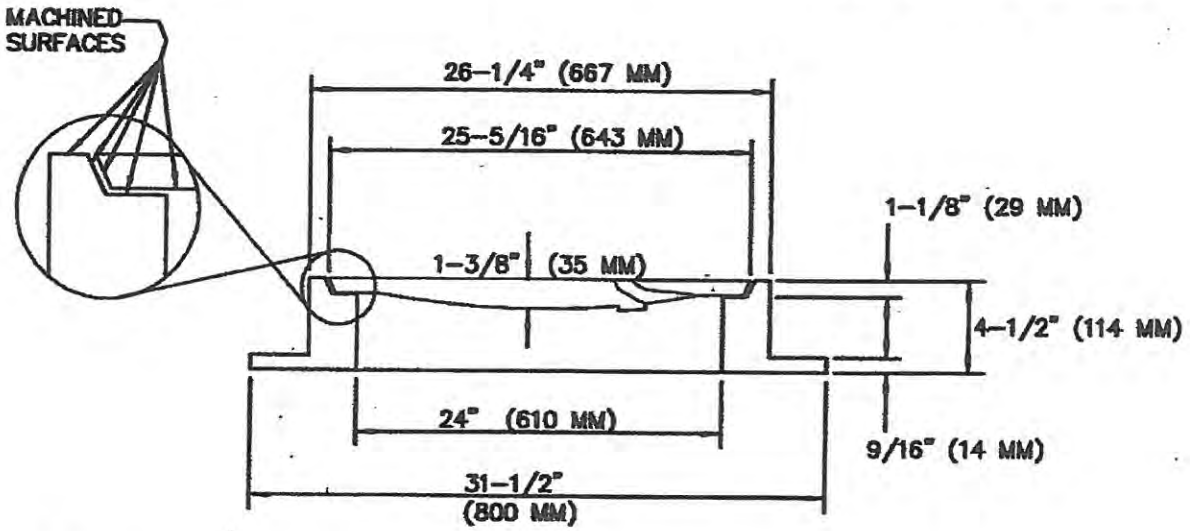

NOTE:

1. USE D&L MANHOLE A–124 EXTRA HEAVY DUTY NON–ROCKING FRAME & COVER OR APPROVED EQUAL.
2. TOTAL SET WEIGHT 320 LBS (146 KG).
3. USE APPROPRIATELY MARKED COVER, "SANITARY SEWER" OR STORM SEWER".
4. CASTING DIPPED IN ASPHALT PAINT.
5. FRAME AND COVER EXCEEDS H–20 WHEEL LOADING.

CITY OF PACIFIC GROVE			
STANDARD DETAILS FOR STREET IMPROVEMENTS			
DESIGNED BY	TITLE MANHOLE FRAME AND COVER		
DRAWN BY AP	APPROVED	DATE	DETAIL No.
CHECKED BY	CITY ENGINEER	RCE NO. 29411	202

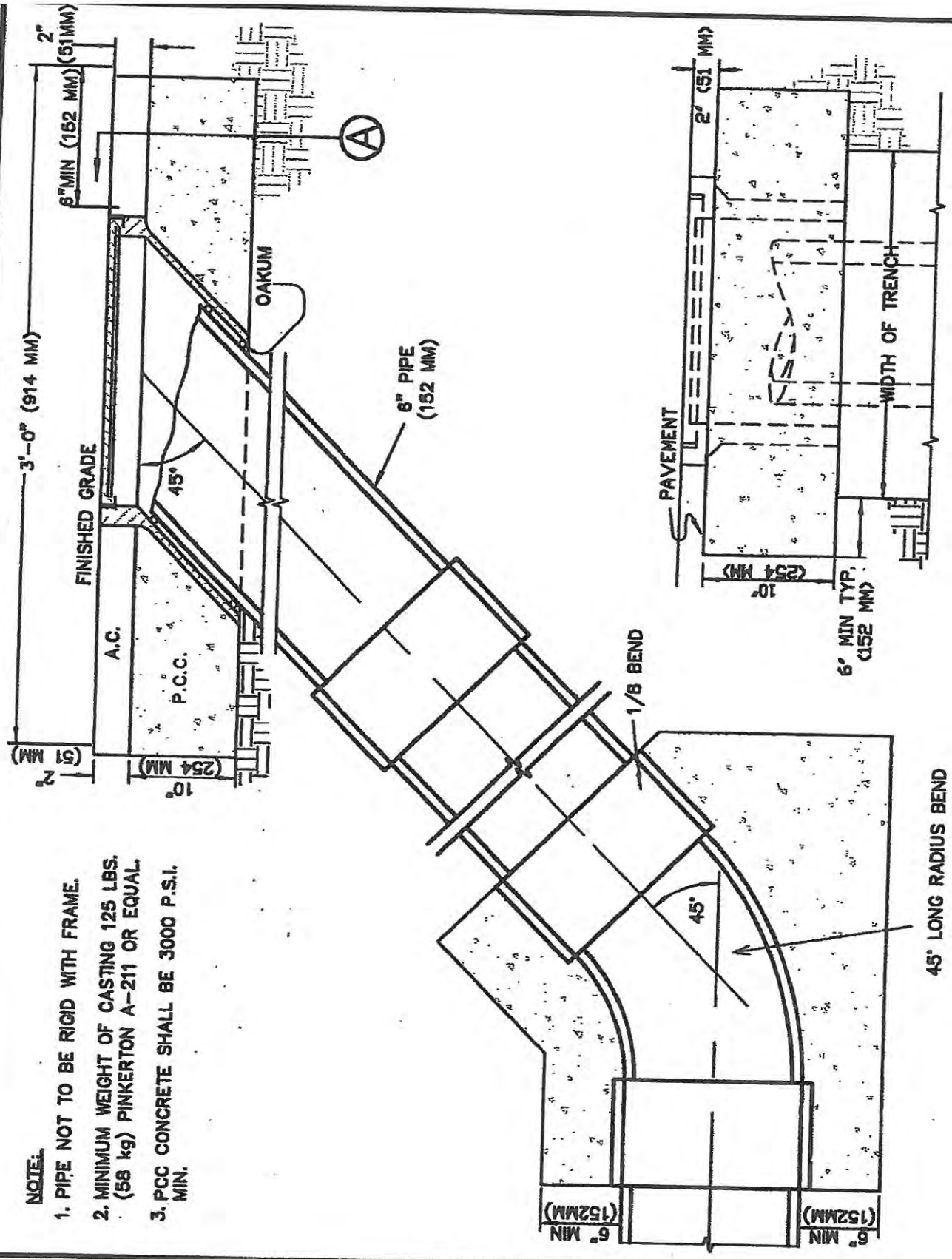

NOTE:

1. PIPE NOT TO BE RIGID WITH FRAME.
2. MINIMUM WEIGHT OF CASTING 125 LBS. (58 kg) PINKERTON A-211 OR EQUAL.
3. PCC CONCRETE SHALL BE 3000 P.S.I. MIN.

CITY OF PACIFIC GROVE

STANDARD DETAILS FOR STREET IMPROVEMENTS

DESIGNED BY	TITLE	CLEAN – OUT	
DRAWN BY AP	APPROVED	DATE	DETAIL No.
CHECKED BY	CITY ENGINEER	RCE NO. 29411	203

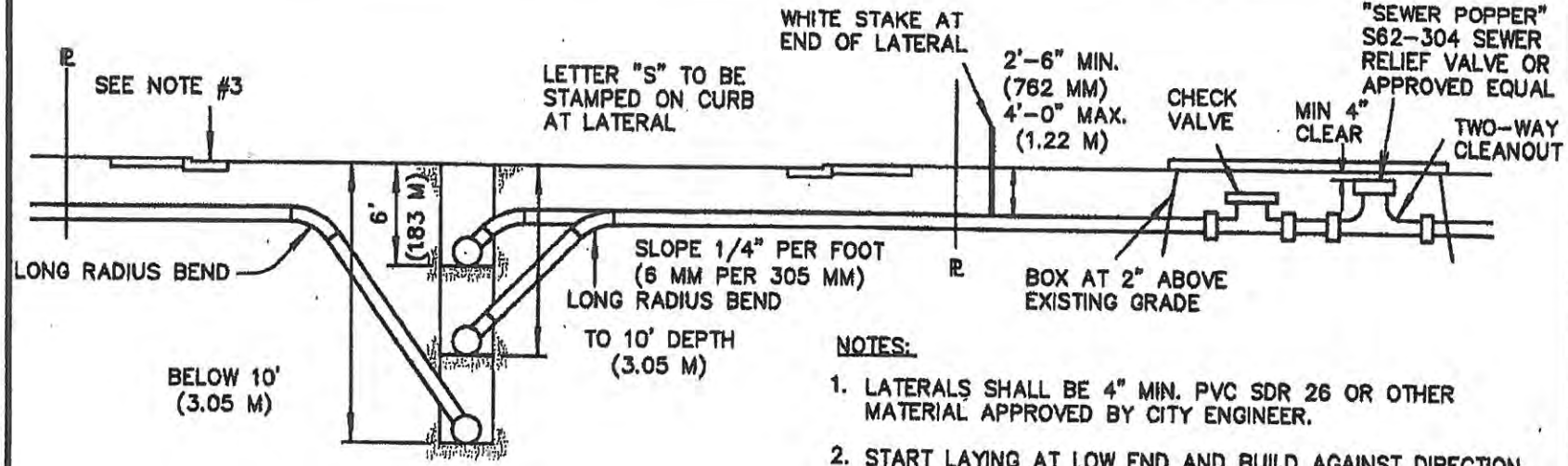

LATERAL CONNECTION

NOTES:

1. LATERALS SHALL BE 4" MIN. PVC SDR 26 OR OTHER MATERIAL APPROVED BY CITY ENGINEER.
2. START LAYING AT LOW END AND BUILD AGAINST DIRECTION OF FLOW.
3. NO TUNNELING UNDER CURB AND GUTTER AND SIDEWALK.
4. CLEANOUTS & OVERFLOW DEVICES SHALL EXTEND 3" ABOVE EXISTING GRADE.
5. CHECK VALVE & SEWER RELIEF VALVE REQUIRED WHEN HOUSE FOUNDATION IS LESS THAN 1' HIGHER THAN NEAREST MANHOLE.
6. LOCATION OF CHECK VALVE & SEWER RELIEF VALVE SHALL BE WITHIN 10' OF HOUSE.
7. ADDITIONAL CLEANOUT REQUIRED WHEN LATERAL EXCEEDS 80' BETWEEN HOUSE AND MAIN CONNECTION.

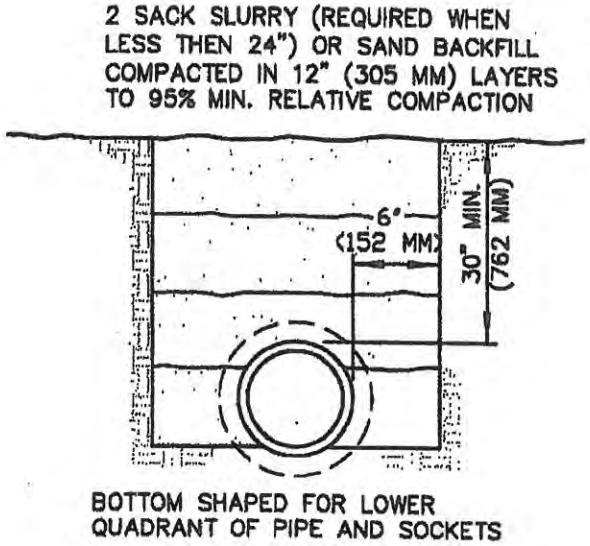

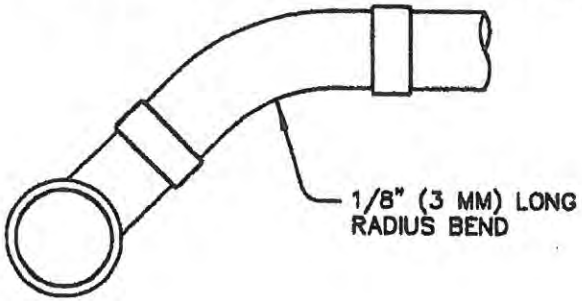

TYPICAL CONNECTION

CITY OF PACIFIC GROVE

STANDARD DETAILS FOR STREET IMPROVEMENTS

WYE AND LATERALS

DESIGNED BY	
DRAWN BY	AP
CHECKED BY	
TITLE	
APPROVED	
CITY ENGINEER	RCE NO. 29411
DATE	
DETAIL No.	204

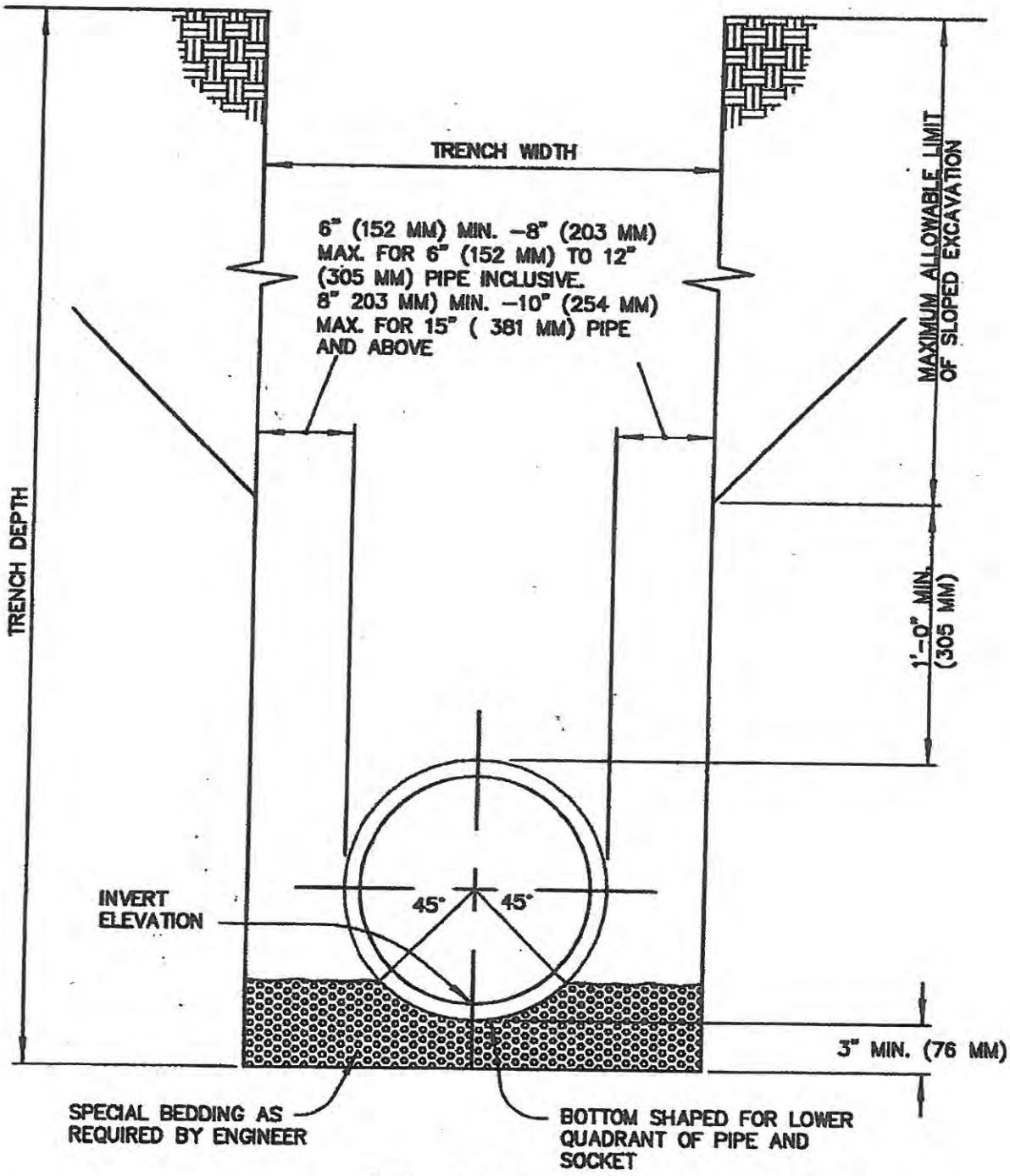

NOTES: MINIMUM SIZE PIPE IS 8" DIA. (203 MM) EXCEPT WHERE SMALLER PIPE IS APPROVED BY CITY ENGINEER.

REVISED SEPTEMBER 2005

CITY OF PACIFIC GROVE		
STANDARD DETAILS FOR STREET IMPROVEMENTS		
DESIGNED BY	TITLE PIPE SUBGRADE FOR SEWER & STORM DRAIN	
DRAWN BY AP	APPROVED DATE	DETAIL No.
CHECKED BY	CITY ENGINEER RCE NO. 29411	205

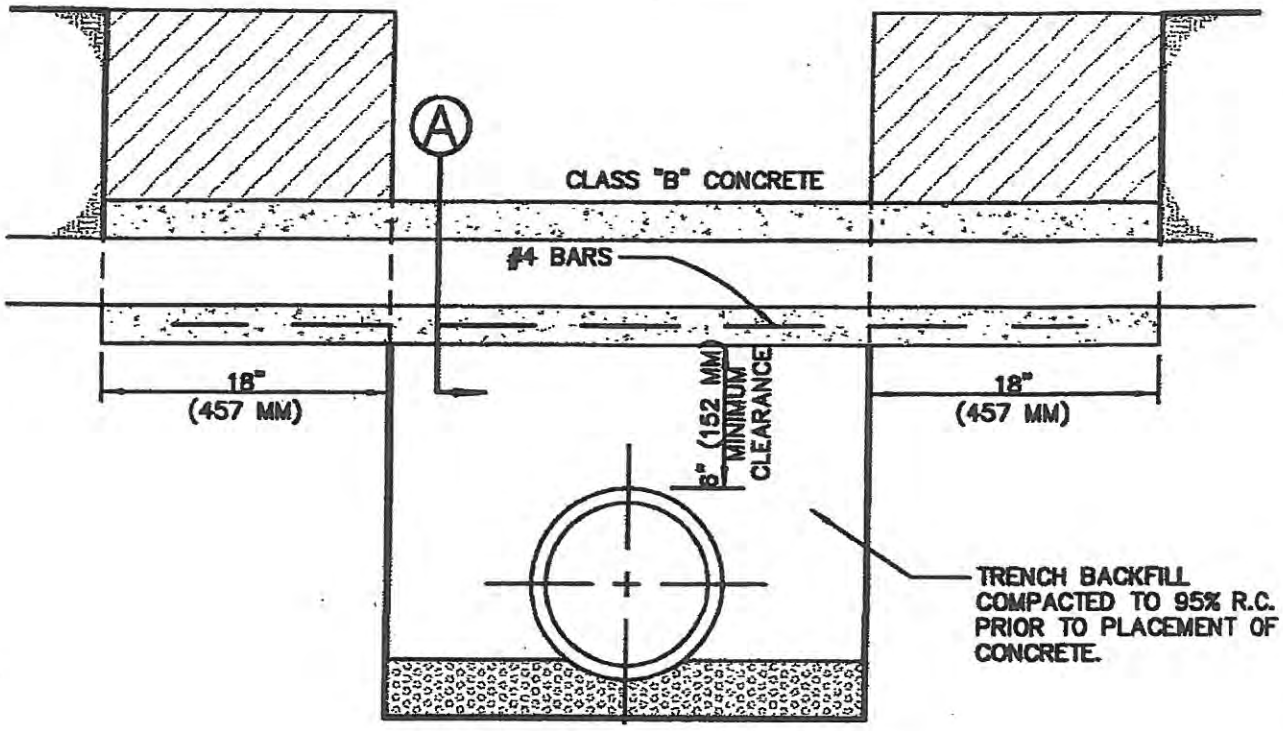

LATERAL CONNECTION

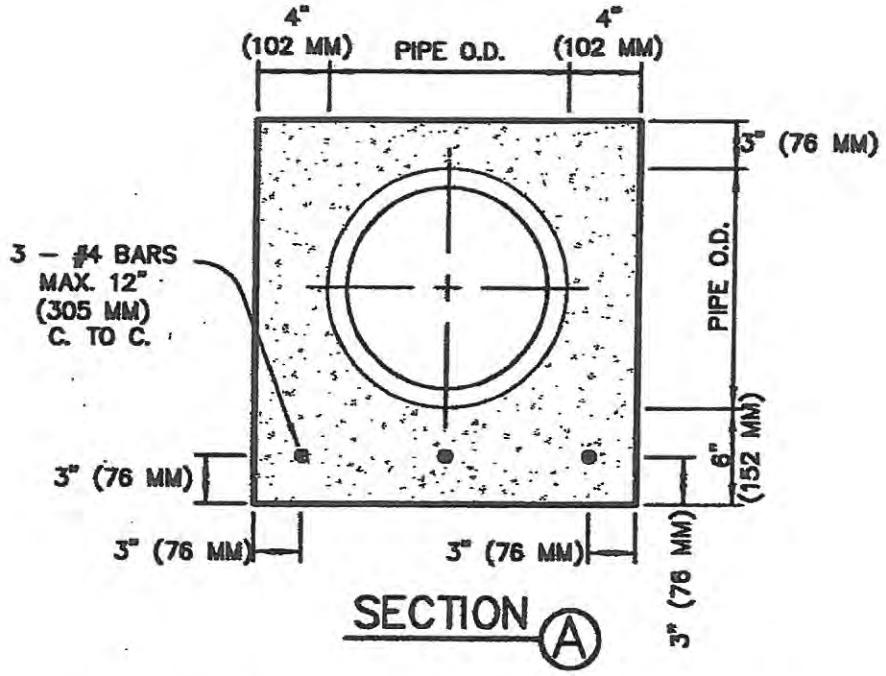

SECTION A

NOTE: REQUIREMENT SUBJECT TO UNDERCUT PIPE CONDITION AND SITUATION.

CITY OF PACIFIC GROVE		
STANDARD DETAILS FOR STREET IMPROVEMENTS		
DESIGNED BY	TITLE CONCRETE SUPPORT FOR UNDERCUT PIPE	
DRAWN BY AP	APPROVED DATE	DETAIL No.
CHECKED BY	CITY ENGINEER RCE NO. 29411	206

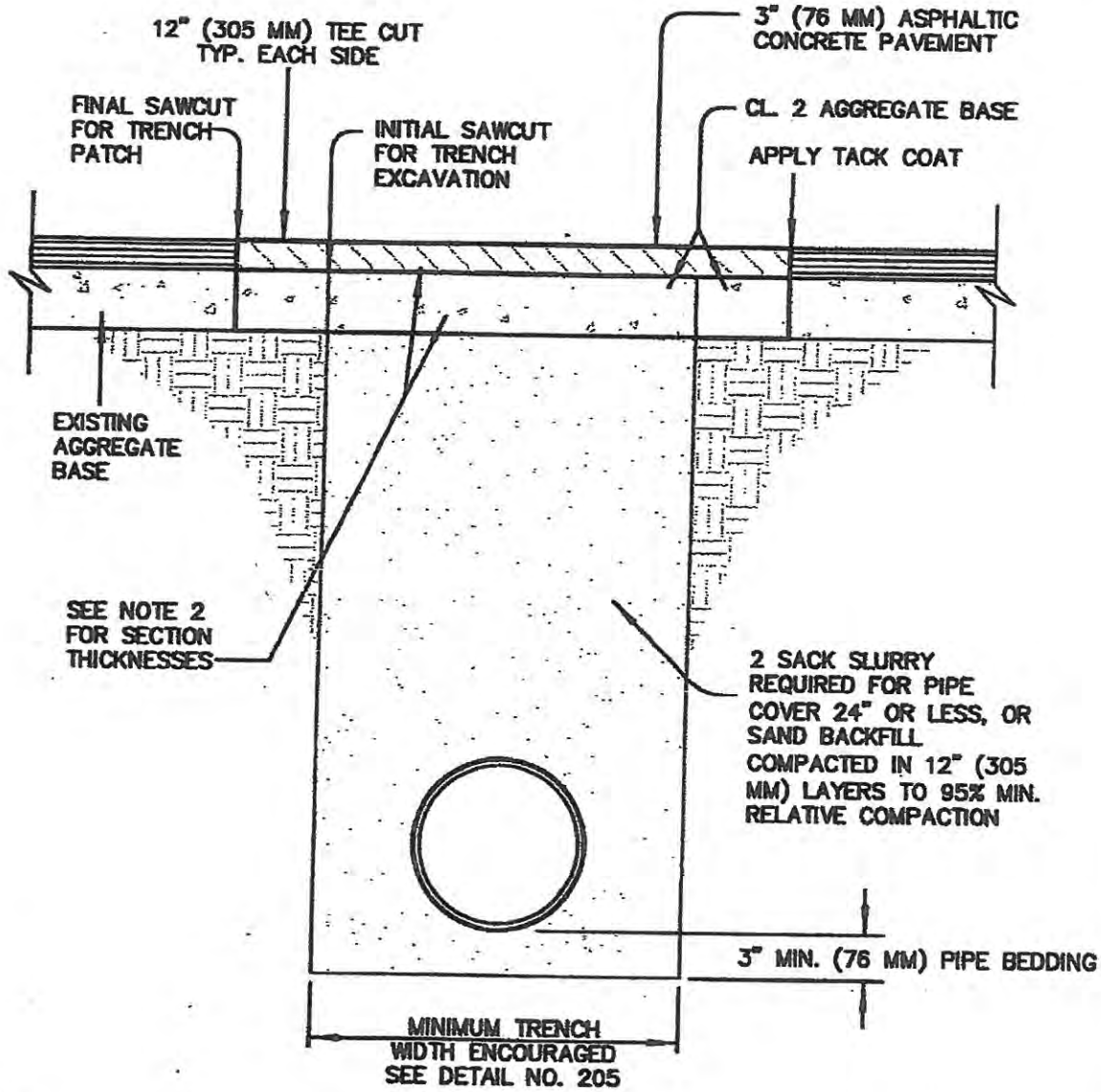

NOTES:

1. SAWCUTS REQUIRED FOR ALL PATCHES
2. DEPTH OF SUBGRADE FOR TRENCH PATCH SHALL MATCH THE EXISTING THICKNESS OF ASPHALT CONCRETE AND AGGREGATE BASE. IN NO CASE SHALL THE TRENCH PATCH BE LESS THAN 3" (76 MM) ASPHALT CONCRETE AND 6" (152 MM) CLASS 2 AGGREGATE BASE. ASPHALT CONCRETE AND CLASS 2 AGGREGATE BASE SHALL CONFORM TO CALTRANS STANDARD SPECIFICATIONS.
3. SAND BACKFILL TO BE VIBRATORY COMPACTED AT OPTIMUM MOISTURE CONTENT TO 95% RELATIVE COMPACTION. CONTRACTOR SHALL PROVIDE FOR COMPACTION TESTING AND SUBMIT FINAL RESULTS TO CITY ENGINEER .
4. 2 SACK SLURRY CEMENT BACKFILL SHALL BE IN ACCORDANCE WITH SECTION 19, "EARTHWORK" OF CALTRANS STANDARD SPECIFICATIONS UNLESS OTHERWISE SPECIFIED BY CITY ENGINEER.
5. CITY ENGINEER MAY REQUIRE OUTLET FOR TRENCH BOTTOM WHEN WATER BUILD UP OCCURS.

CITY OF PACIFIC GROVE		
STANDARD DETAILS FOR STREET IMPROVEMENTS		
DESIGNED BY	TITLE TRENCH SECTION & PAVEMENT REPLACEMENT	
DRAWN BY AP	APPROVED DATE	DETAIL No.
CHECKED BY	CITY ENGINEER RCE NO. 29411	207

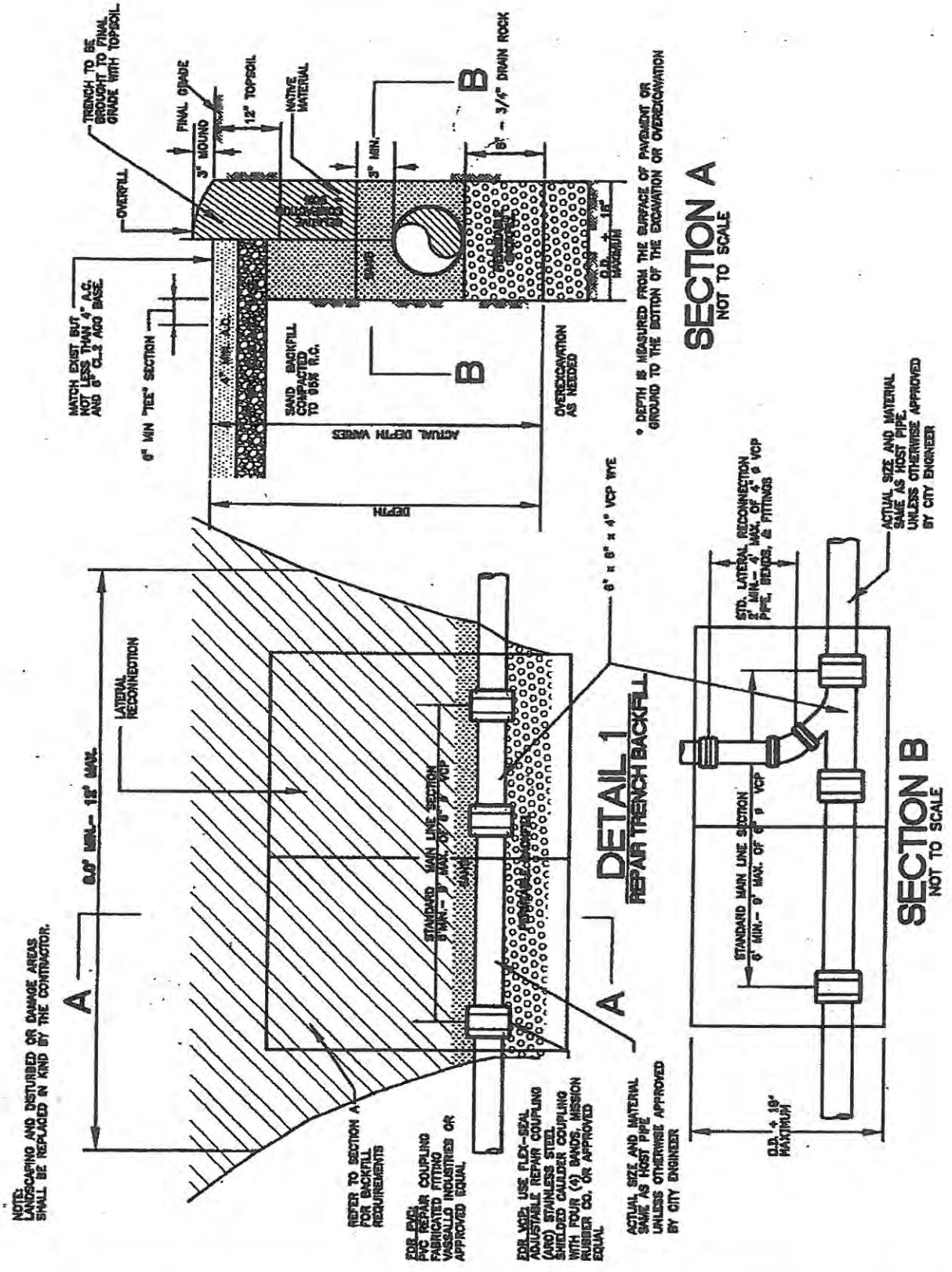

CITY OF PACIFIC GROVE

STANDARD DETAILS FOR STREET IMPROVEMENTS

DESIGNED BY	TITLE	SANITARY SEWER SPOT REPAIR	
DRAWN BY AP	APPROVED	DATE	DETAIL No.
CHECKED BY	CITY ENGINEER	RCE NO. 29411	208